The Unloading Modulus of Soft Soil:

A Field and Laboratory Study

Jenny Persson

Chalmers University of Technology
Göteborg, Sweden

Background

Uncertainty in empirical relationships for estimating the unloading modulus and consolidation time

Scope

Field (and laboratory) testing to determine the unloading stiffness

Objective

Estimate the stress-strain characteristics for clay at unloading for more cost effective design

Instrumentation

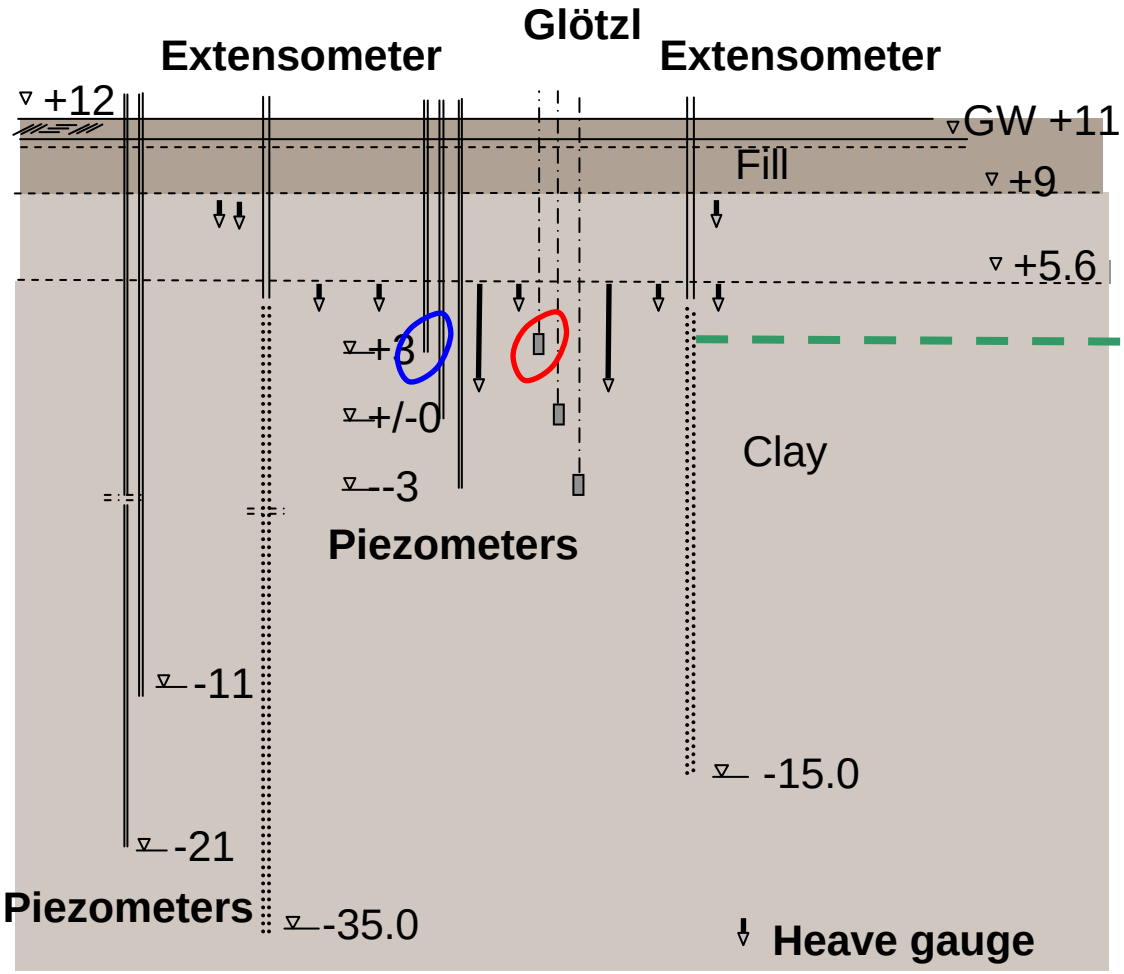

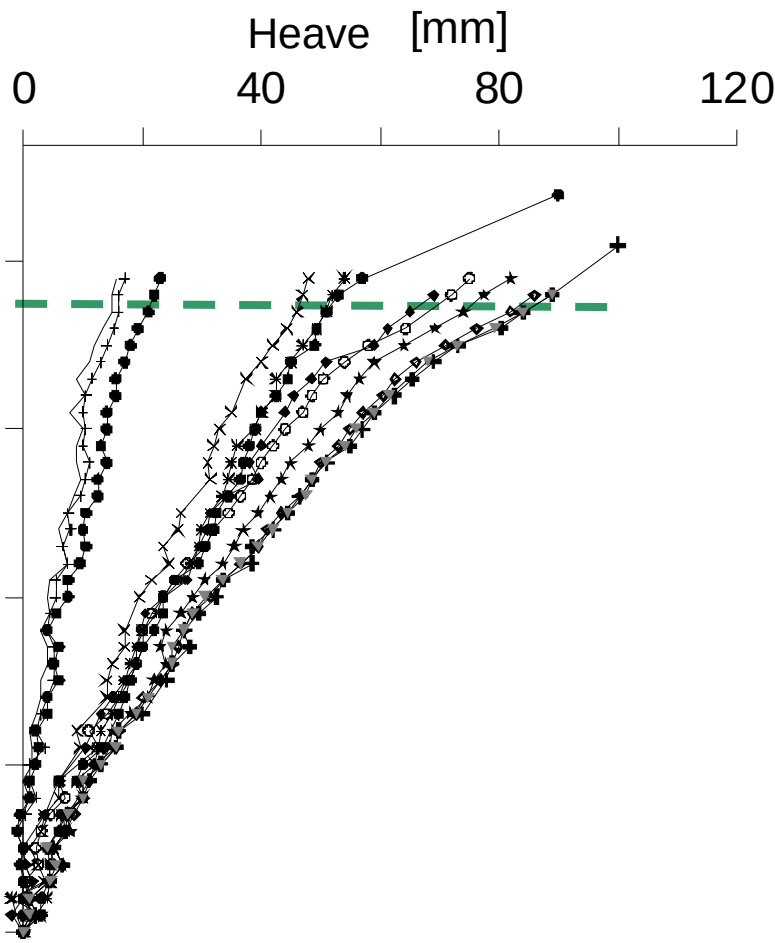

February 5, 2003

February 23, 2003

Field results

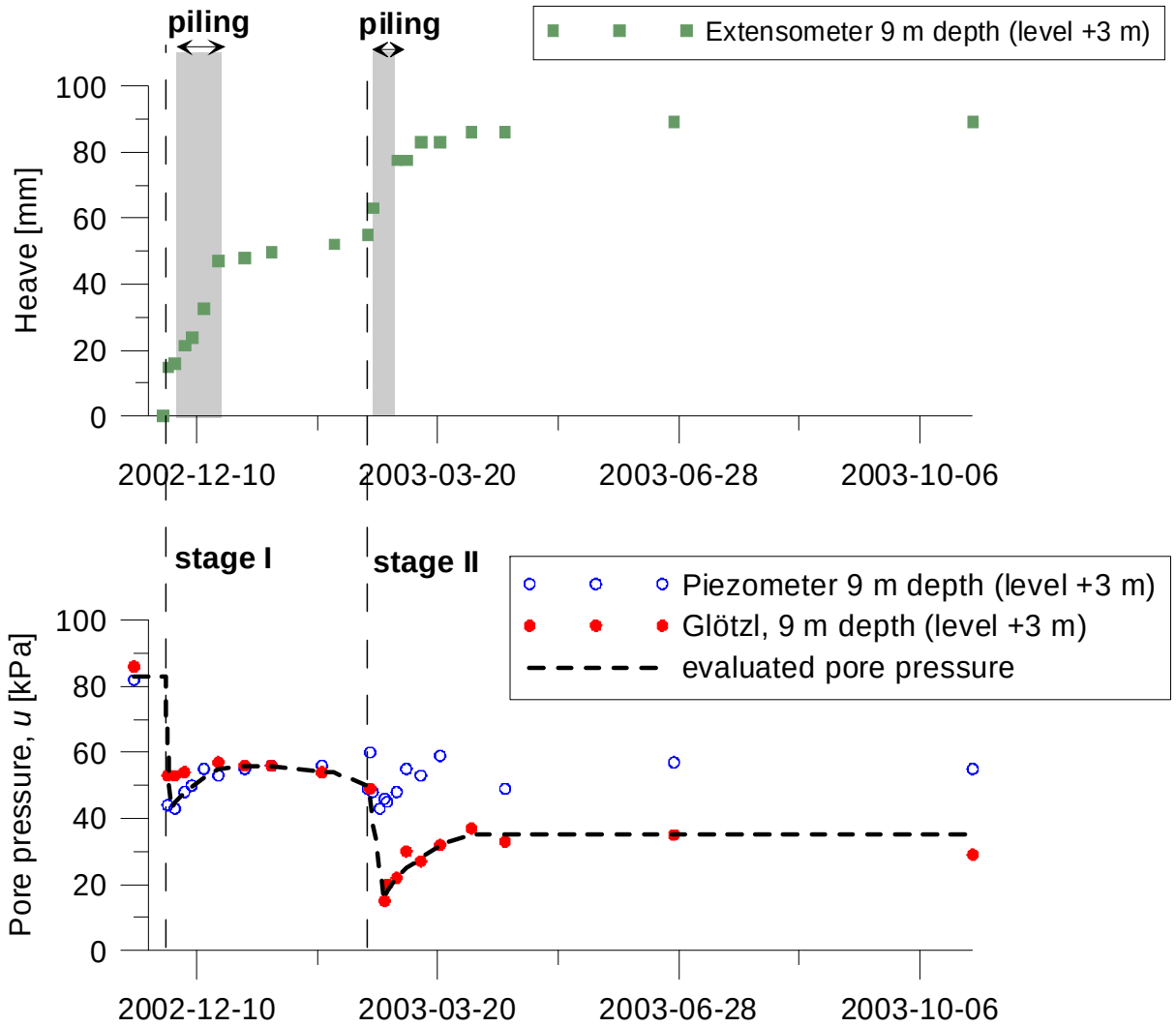

Laboratory tests

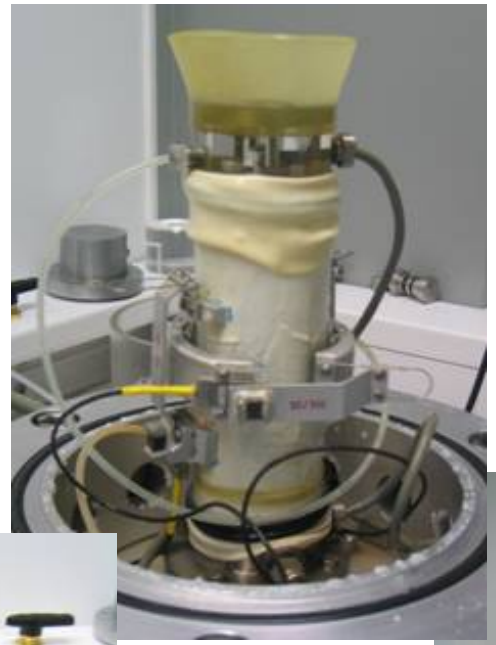

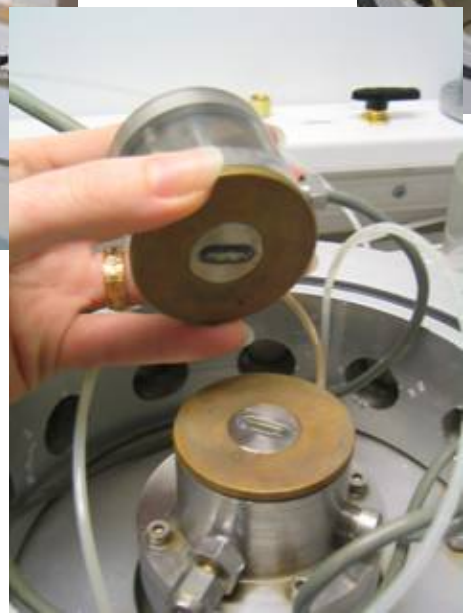

Lab and field results

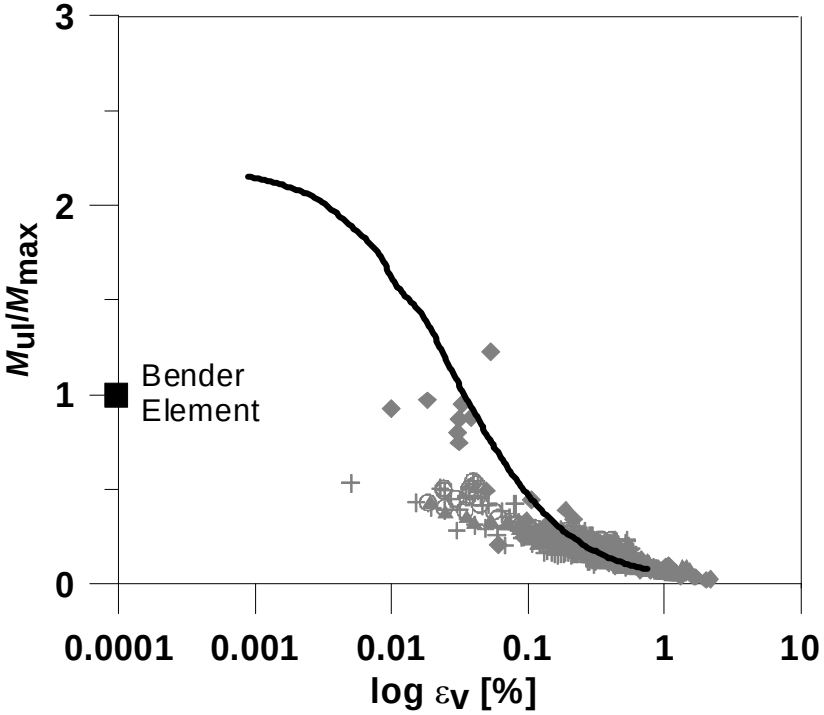

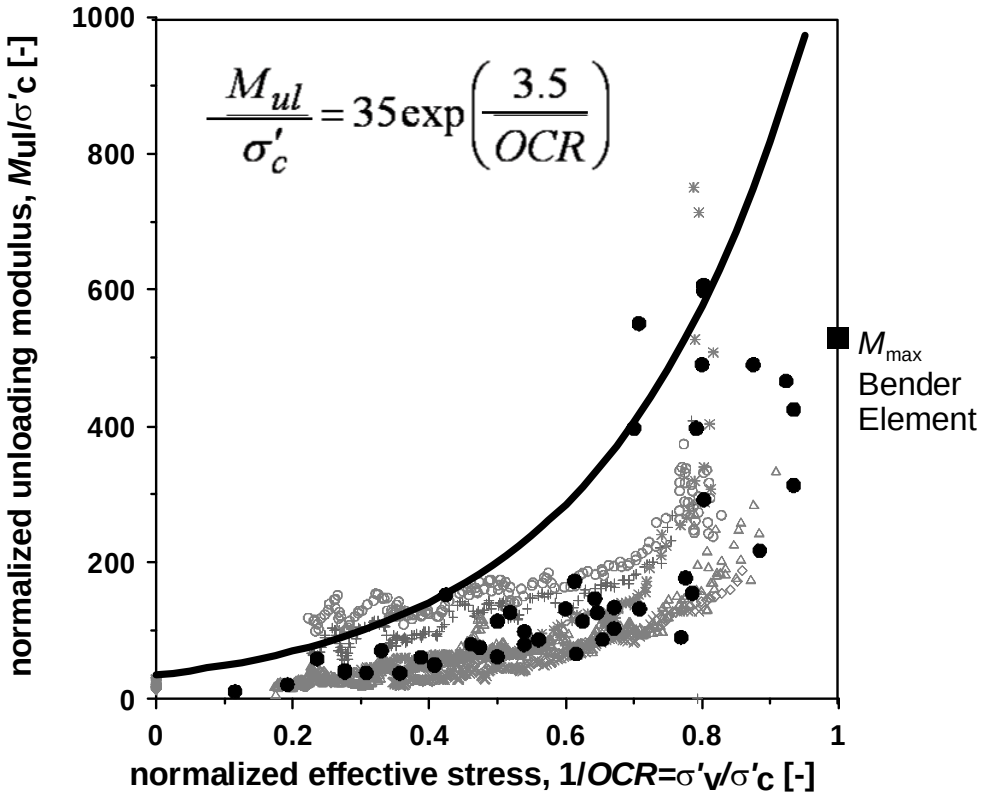

Recommended empirical model

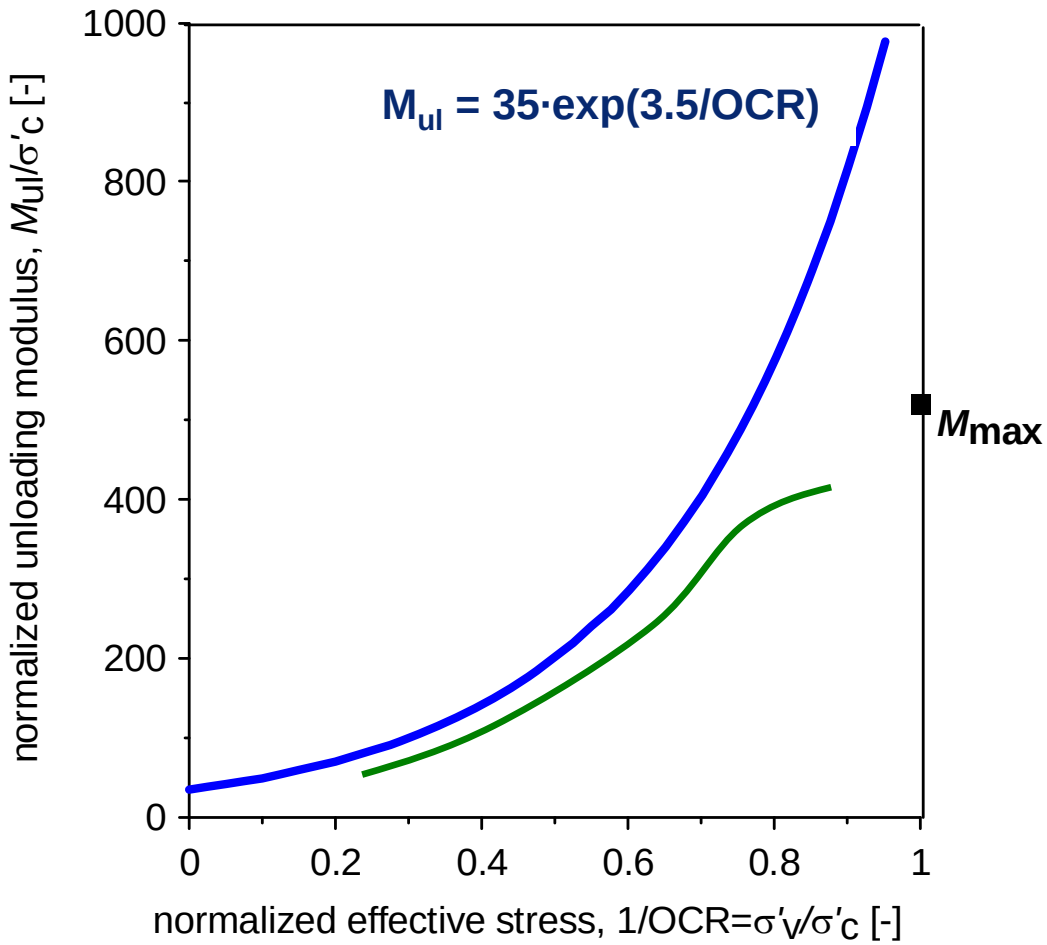

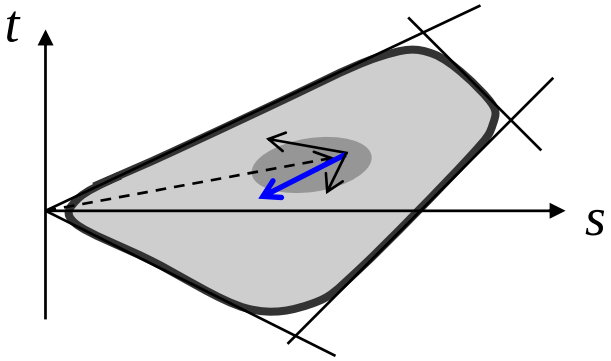

M_{max} Bender Element

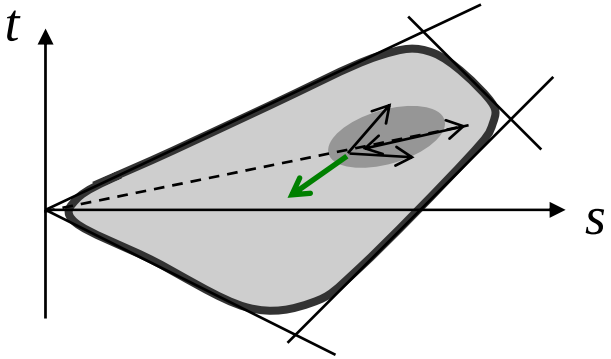

Conclusions

Unloading stiffness is large at small strains and decreases rapidly with decreasing stress level

- field measurements indicate stiffness twice as large as laboratory values (Bender Elements)
- stress history important when reconsolidating laboratory specimens
- creep rate affects the unloading stiffness

Long-term pore pressure distribution should be taken into account when predicting heave

Thank you for your attention!

The project was financed by

formas

CHALMERS

NCC

Vägverket