Field tests for blast compaction of loose sand deposits

Essais sur le terrain de compactage par explosion de dépôts de sable lâche

G.Gudehus – *Institute of Soil and Rock Mechanics, University of Karlsruhe, Germany*
W. Kuntze – *LMBV, Senftenberg, Germany*
V. R. Raju – *Keller Grundbau, Kuala Lumpur, Malaysia (Formerly: University of Karlsruhe, Germany)*
U.Warmbold – *Laubag, Senftenberg, Germany*

ABSTRACT: Mining deposits of loose fine sand in East Germany are compacted by blasting in order to prevent spontaneous liquefaction after flooding. Mechanisms of liquefaction and densification have been investigated by field tests with a single explosive charge and a group of charges, the latter also close to a slope. A shock wave produces a suspension zone which rises, leaving behind denser soil. Group effects are briefly outlined. The risk of total liquefaction at a slope instead of densification by blasting is not yet fully mitigated.

1. FIELD TESTS

1.1 Single charge

A single charge was detonated in a deposit of fine sand with ca 90 % saturation (Fig. 1). A shock front was measured propagating with a velocity of ca 1700 m/s at 1 m above to ca 330 m/s 8 m above the ignition point. A gravity-type wave appeared at the surface up to ca 10 m distance, leading to a Rayleigh-type wave farther away. Components of particle velocity measured down to a of depth of 11.5 m reached ca 150 to 250 mm/s at 8 m, ca 15 mm/s at 15 m, and ca 10 mm/s at a distance of 50 m. Excess pore pressures, measured from 7 m to 17 m depth and from 8 m to 60 m distance, caused total liquefaction up to ca 8 m and partial liquefaction up to ca 40 m distance within ca 10 s after ignition, and faded away within ca 2 hours with weak pulsations.

An elliptic depression with cracks and dislocations reached a volume of ca 700 m^3 within 3 hours (Fig. 2). A central crater appeared 1 hour after ignition and reached ca 66 m^3. The water table rose temporarily by ca 0.5 m, and higher at some measurement points. The soil resistance to static penetration was ca 50 % higher afterwards, but without the peaks due to compacted former working levels as indicated in Fig. 1.

1. 2. Group of charges near a slope

A second intensely instrumented field test was conducted near a slope with a group of successively

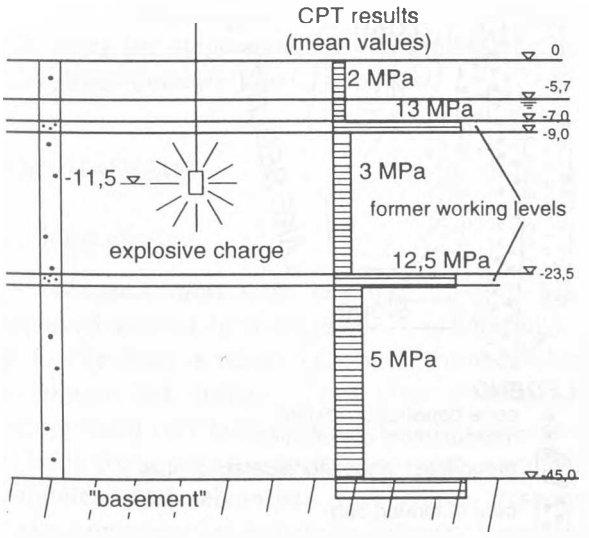

Fig. 1: Single charge blasting: Setup and schematic CPT results.

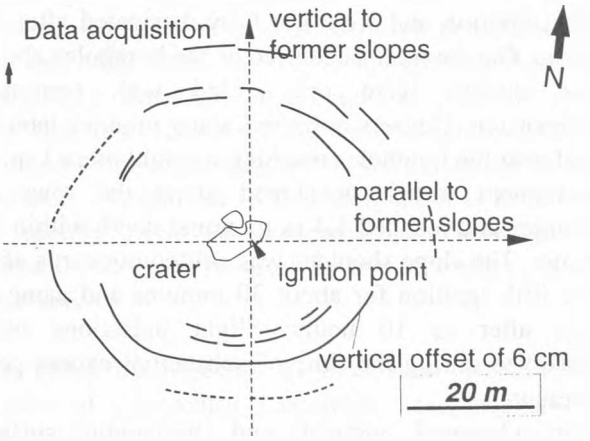

Fig. 2: Crater and cracks after after blasting of a single charge.

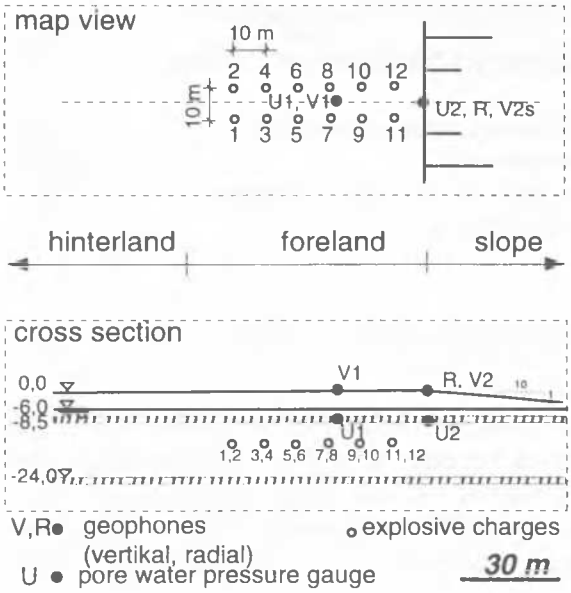

Fig. 3: Setup of blasting experiment near a slope.

Tab. 1: Maximal particle velocities measured after every single ignition

Ignition point	1,2	3,4	5,6	7,8	9,10
Charge [kg]	7,5 ea.	7,5 ea.	7,5 ea.	7,5 ea.	22,5 ea.
Distance from measuring point [m]	56,5	46,5	36,5	26,5	16,5
Particle velocities (mm/s)					
vertical	20,5	18,5	26,25	52,5	115,5
radial	12,5	14,0	24,5	24,5	175,0

ignited charges (Fig. 3). The soil was similar as in the first test, but with ca 20 % silt recognizable from excess pore pressures during static penetration. Ignition sequence, charges, distances, and maximal vertical and radial particle velocities are given in Table 1.

Excess pore pressures tended to accumulate after the third ignition and were not fully dissipated after 20 hours. Gas fountains occurred as the boreholes above the charges were only filled with bentonite suspension. Geysers appeared some minutes later at and near the boreholes reaching a height of ca 1 m. A settlement trough developed along the rows of charges and reached 1.4 m maximal depth within 20 hours. The slope shoulder was shifted outwards after the fifth ignition for about 30 minutes and came to rest after ca 10 hours. Slight pulsations were observed during the time of substantial excess pore pressures.

The observed vertical and horizontal surface displacements indicated a substantial densification. However, that was not confirmed by an increase of cone penetration resistance. The velocity of shear waves generated by torsional shocks through a vane from 6 m to 8 m depth was measured by geophones in 8 m depth and 10 m to 50 m distance along the symmetry axes. The velocity was markedly reduced and irregular in the period of excess pore pressures, and higher than that before blasting after its full dissipation. The densification is thus clearly proven.

1.3. Groups of charges in different combinations

A compacted zone, called hidden dam, is produced by blasting a strip of ca 80 m width and 40 m depth ca 50 to 100 m from the slope shoulder. It supports the inland soil, whereas the soil towards the slope has to be densified by weaker blasting. Charges, positions and ignition intervals have to be determined in such a manner that an optimal densification is achieved and a liquefaction flow is avoided. These goals require a series of field experiments.

Groups of 5 boreholes at a distance of 20 m to 25 m, charges of 35 kg in 30 m and 45 kg in 43 m depth, and ignition intervals from 25 ms have been found to be optimal by systematic variation. The cone penetration resistance increased by ca 20 % to 30 % after blasting within the hidden dam. A further increase by ca 40 to 50 % was observed after several months.

A slope failure by liquefaction was triggered by 5 intentionally bigger charges in front of the hidden dam in one place (Fig. 4).

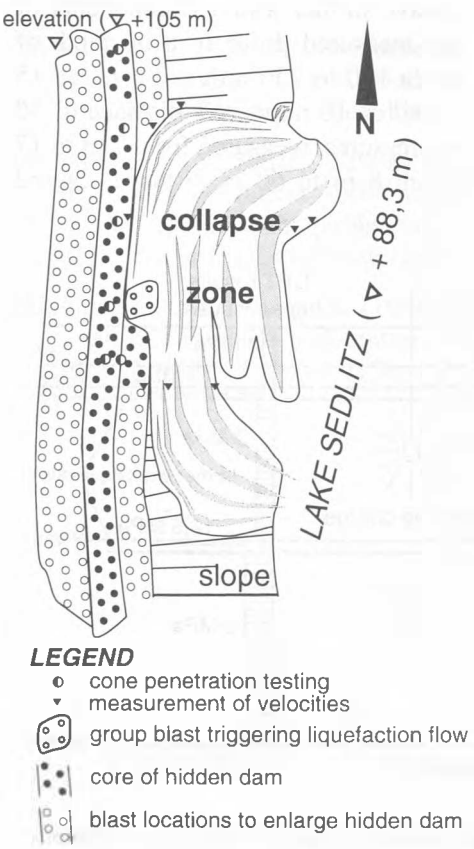

Fig. 4: Liquefaction flow triggered by group blasts

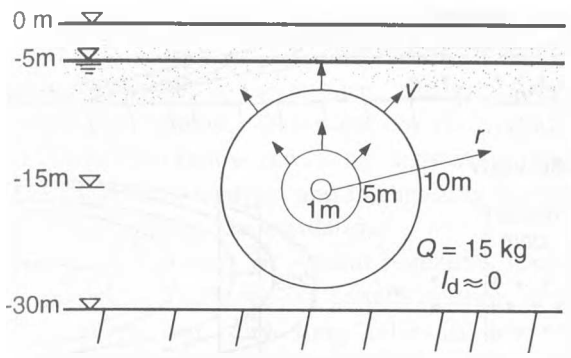

Fig. 5a: Single blast mechanism.

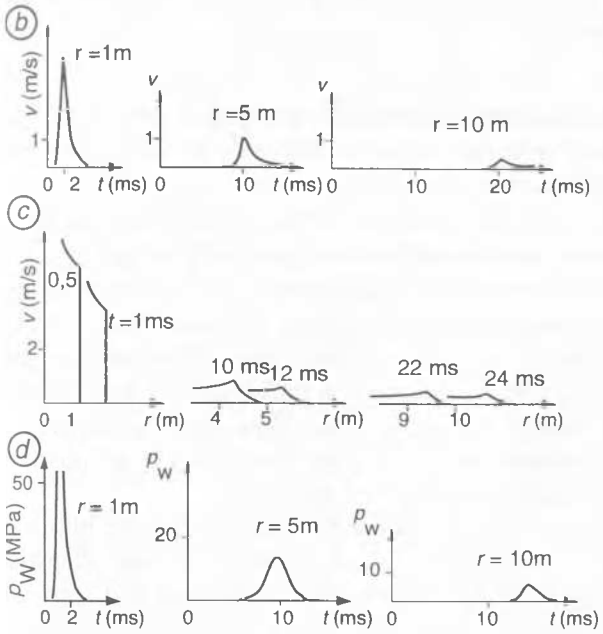

Fig. 5b, c, d: Development of velocity and pressure after single blast.

Particle velocities up to 170 mm/s were observed at 50 m distance from the ignition point, decaying to ca 10 mm/s at 300 m distance. A threshold value of 25 mm/s along the slope shoulder was found to be safe against blast-induced liquefaction flow.

2. MECHANISMS

2.1. Single charge

The estimated short term response of very loose submerged ground to a single blast is indicated in Fig. 5. The front is nearly spherical before reaching the bottom and surface (a). Radial velocity and pressure reach very high values during the passage of the front (b, c, d). A shock front with very high amplitudes and abnormal mechanical response develops only up to a very short distance. It causes a compression wave outside with a rather low speed of propagation due to gas bubbles. This destroys the loose skeleton completely leaving behind a suspension after decompression in a zone of some metres diameter. The quantities in Fig. 5 are based on field data and rough calculations. With further travelling distance, the wave is no more spherically symmetric nor dominantly longitudinal. Rearrangements of the skeleton occur in intermediate distances, whereas in large distances the waves are dominantly elastic.

The bubble zone is driven upwards by excess pore pressure leaving behind a densified zone (Fig. 6). The rising front is unstable and can therefore produce geysers, and a crater can appear by the collapse of the unsaturated cover (a). The pore pressure settles back to hydrostatic values alongside with the expulsion of water (b). A sedimentation of the bottom leads to an increase of the solid volume fraction (c).

Pulsations of pore pressure and particle velocity are produced by lumps of soil falling from the ceiling of the suspension zone during its rise. Minor densification of the surroundings is also caused by this process.

These mechanisms are far outside the scope of presently feasible soil-mechanical calculations. The wave propagation is abnormal and can even be mathematically ill-posed. Small scale tests are therefore being conducted using shocks produced by compressed air in order to get some clarification, and support empirical rules.

2.2 Groups of charges far from slopes

The group effect is briefly considered here for 2 charges in neighbouring boreholes with different ignition intervals. With simultaneous ignition, 2 suspension zones unite and rise nearly as with a single charge. The interfering compression waves travel on with low damping in the suspension zones. The repeated passage has no additional effect towards liquefaction and subsequent densification. On the other hand, a very long ignition interval suffices for densification around one point in such way that the wave from the next point is heavily damped without substantial further densification on this side. An optimal total densification is achieved by ignition intervals somewhere in between. It appears that shear reversal by a dipole effect is of good use.

The group mechanisms are even more beyond the reach of presently available soil-mechanical calculation methods. An approach towards an optimum could therefore only be attempted by variation of field parameters, and is further supported by model tests.

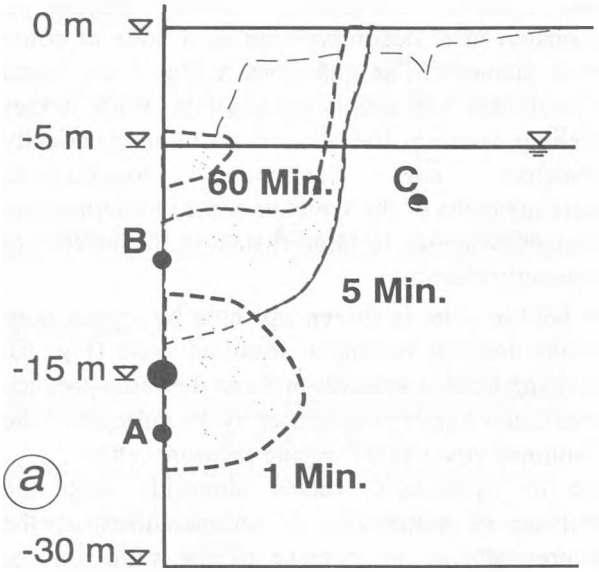

Fig. 6a: Rising bubble zone after single blast.

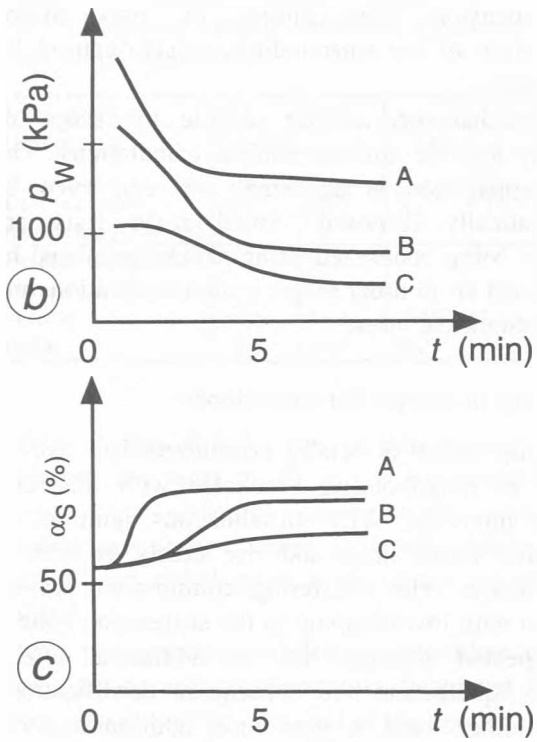

Fig. 6b, c: Development of pore water pressure (b) and solid volume fraction (c).

2.3. Blastings near a slope

The critical case of a blast-induced liquefaction slope failure is sketched in Fig. 7. Part of the slope can be triggered to flow off by a wave of very low amplitude produced by the blast. The remaining steeper slope is more prone to liquefaction so that the subsequent part flows downwards. This goes on in a progressive manner until the remaining slope is shallow enough and also supported by capillary cohesion of the

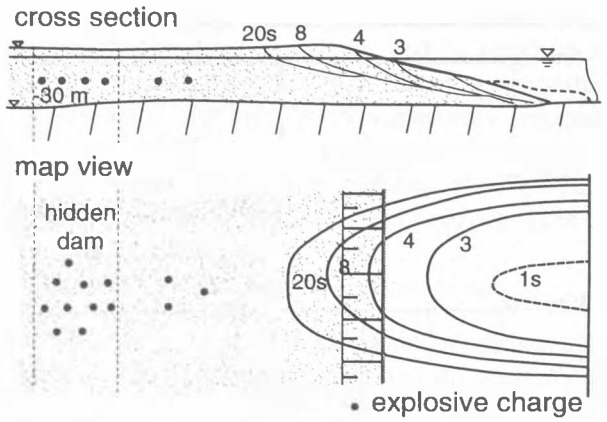

Fig. 7: Liquefaction flow after triggering blasts in the foreland.

surface layer. Such events occurred in the region with flow volumes from ca 500 m^3 to more than one million m^3.

In order to reduce or avoid serious losses a better understanding and control is urgently needed.

The spontaneous liquefaction can be analysed by considering a possible release of kinetic energy. It can occur for void ratios higher than critical with certain initial stress states, and is influenced by gas bubbles. In reality, a liquefaction flow always requires a disturbance above a certain level, which can possibly be quantified by particle velocities.

Attempts are being made to use successive blasts of low magnitude for a more cautious stepwise densification. Nevertheless, equipment and staff are endangered, and safeguarding is needed. This is the main dilemma: Because of the risk the whole area has to be closed to the public, but the required densification necessitates working in the most dangerous areas. Methods are therefore being developed to trigger and densify the slope region in sufficiently small steps.

3. CONCLUSIONS

Loose fine sand deposits from lignite mining constitute an unacceptable risk in a huge area after the rise of the water table. It appears that only blasting is an economic means for the necessary densification. The mechanisms of liquefaction and densification are beyond the reach of present soil-mechanical calculation models, and even with intensive field monitoring reliable predictions are as yet impossible. Field tests have therefore been conducted, and uncommon methods of analysis are being developed for interpretation and control.

The single blast in loose sand produces a nearly spherical compression wave before reaching the bottom and the surface. Gas bubbles reduce pressure

amplitudes and speed of propagation, and reappear after decompression. A suspension zone is left behind and rises to the surface, causing geysers and sometimes craters. Densification is produced by sedimentation below the rising suspension, and also by contractant shearing, and has nothing in common with conventional consolidation.
Groups of blastings in several boreholes lead to an optimal densification with certain ignition intervals. Very short and very long intervals lead to an ineffective energy dissipation. It appears that the dipole effect enhances the optimum, which however certainly depends on the special field conditions.
A hidden dam of densified soil is required to protect the hinterland. The soil towards the slope can at best be stabilized by a series of smaller blasts. The conflict of necessary densification and blast-induced liquefaction flow can hopefully be solved by cautious triggering, improved monitoring and further analysis.

ACKNOWLEDGEMENT

The first blasting experiments and analyses were made ca. 10 years ago by the *Braunkohlekombinat Senftenberg* and the *Geotechnical Institute Freiberg* (Prof. Förster). After the German reunification, this project was continued by the companies LAUBAG and LMBV and the Freiberg Institute. This work was indispensable for the present report and is greatfully acknowledged. The work is now being continued in cooperation, financially supported by the German Ministry of Research and Education.

REFERENCES

[1] Warmbold, U. und Kuntze, W. (1994): Sicherung böschungsnaher, setzungsfließgefährdeter Kippenbereiche an Tagebau-Restseen. Proceedings Baugrundtagung Cologne, 331-348.

[2] Raju, V.R. (1994): Spontane Verflüssigung lockerer granularer Körper-Phänomene, Ursachen, Vermeidung. Publ. of Institute for Soil and Rock Mechanics, Karlsruhe, Vol. 134

[3] Ivanov, P.L. (1983): Densification of slightly cohesive soils through blasting. Moscow, „Nedra" (Russian)

[4] Förster, W., Walde, M. und Dierichs, D. (1986): Setzungsfließen im Braunkohlenbergbau. Proc.8 Donau Europ. Konf. Bodenm. u. Grundb., Nürnberg

[5] Keßler, J. und Förster, W.(1992): Sprengverdichtung zur Verbesserung setzungsfließgefährdeter Kippen. Freib. Forschungsheft Nr. A819