INTERNATIONAL SOCIETY FOR
SOIL MECHANICS AND
GEOTECHNICAL ENGINEERING

SIMSG ISSMGE

This paper was downloaded from the Online Library of the International Society for Soil Mechanics and Geotechnical Engineering (ISSMGE). The library is available here:

https://www.issmge.org/publications/online-library

This is an open-access database that archives thousands of papers published under the Auspices of the ISSMGE and maintained by the Innovation and Development Committee of ISSMGE.

Failure analysis of pile foundations

Analyse de l'état limite des fondations sur pieux

BENT HANSEN, Professor of Soil Mechanics, Technical University of Denmark

SYNOPSIS The design of pile foundations by specifying a safety against ultimate failure using the theory of plasticity is permitted in the Danish Code of Practice. This paper outlines the general principles of calculation and describes the method which was used for checking the safety of some of the piers of the Faroe Bridge. In these piers the piles are able to transmit moments and transversal forces to the foundation. The calculation method is based on statically admissible lower bound solutions, and it utilizes the optimization technique of the Simplex method from Linear Programming.

INTRODUCTION

Pile groups supporting bridge piers must be able to take eccentric and horizontal loads. They must therefore include batter piles, and the determination of the loads on the individual piles for any given load case on the pier foundation is a general three-dimensional equilibrium problem, in which all six equilibrium equations must be satisfied.

A calculation method for such pile groups was first formulated by Nøkkentved (1924), who assumed linearly elastic piles which are able to take only axial forces. Schiel (1960) introduced a systematic notation to facilitate calculations in practice and to take into account piles which are rigidly fixed in the foundation and laterally supported by the soil. On this basis a pile group may be calculated by the theory of elasticity, the design criterion being that the design axial pile force, or bending moment, or transversal force, must not be exceeded in any pile.

In Danish design practice (DIF, 1984) the design criterion is ultimate failure under the theory of plasticity of the entire pile group. By this theory the individual piles are assumed to yield when design stresses are reached, and ultimate failure will not occur until so many piles have yielded that the foundation has become a mechanism. The safety factors involved may be adjusted so that the number of piles required in a given group is much the same by the two calculation methods, but calculations by the theory of plasticity are simpler, especially during design when piles with given design strengths are to be arranged so that the resulting group can take a given total load.

Design and calculation procedures for pile groups by the theory of plasticity, assuming only axial loads in the piles, was formulated by Hansen (1959). This assumption is reasonable for precast concrete piles with widths up to 0.40 m. For larger piles, e.g. 0.70 m steel tubes, the moments and transversal forces will frequently be important for the bearing capacity of the pile group. Since no generally applicable method existed to take these effects into account by the theory of plasticity, such pile groups are usually still calculated by the theory of elasticity, however.

In 1981 a new calculation procedure was developed which utilizes the technique of Linear Programming to find statically admissible lower bound solutions to the bearing capacity problem of pile groups, also when the piles are rigidly fixed in the foundation and laterally supported by the soil. This method was used to check some of the piers of the Faroe Bridge against ultimate failure for the most critical load cases.

THEORY OF PLASTICITY

In calculations by the theory of plasticity all strains in the piles and in the soil are plastic. Therefore, the corresponding stresses are yield stresses resulting from design values of axial pile forces, pile moments, and transversal forces, and from lateral earth pressures in ultimate failure. The usual upper and lower bound theorems for kinematically and statically admissible approximate solutions, respectively, can be shown to apply.

Upper bound solutions

A kinematically admissible solution for a given pile group acted upon by a given total load can be defined by specifying the 6 rigid body movement components (3 translations and 3 rotations) for the foundation block. This determines the axial and lateral movements of the piles, the development of yield hinges etc. As the corresponding resistances are known, the work equation can be used to determine the factor of safety on the total load above the safeties which have been applied on the individual load components and resistances.

Such a solution is known to be an upper bound solution. Thus, the correct solution according to the theory of plasticity may be found by seeking the rigid body movement which determines the minimum value of the total factor of safety.

This defines a calculation method which is useful e.g. for plane pile foundations where the possible rigid body movements to investigate are either translations perpendicular to some pile rows or rotations about intersection lines between pile row planes. The method is less useful for three-dimensional pile groups because of the large number of possible rigid body movement states. The seeking of a minimum solution is difficult by hand, and it is not simple to program for a computer.

Consequently, computer calculations of ultimate failure in pile groups are frequently done by assuming the total factor of safety to increase monotonously from zero, taking the pile group from the initial elastic state through intermediate elastic-plastic states until ultimate failure is reached. This leads to a unique solution, but the work of computation is considerable.

Lower bound solutions

A statically admissible solution is defined by a set of axial loads, moments, and transversal forces in the piles which are in equilibrium with the given total load multiplied by a factor of safety, and which do not exceed the failure conditions anywhere in the piles or the soil. Such a solution is known to be a lower bound solution, i.e. the correct solution according to the theory of plasticity corresponds to the set of pile forces which permits the maximum factor of safety to be multiplied on the total load.

This defines a calculation method which is useful for design. As the forces between piles and foundation can be fixed at known design values, the problem of arranging a pile group so that it can take a known total load is reduced to the problem of arranging known forces so that they in an efficient way, e.g. using the least possible number, balance the given load.

Efficient calculation procedures have been developed to design by this method e.g. doubly symmetrical pile groups acted upon by doubly symmetrical load cases. The method has not been used on the bearing capacity problem for given pile groups until it was realized that the determination of the set of pile forces which corresponds to the maximum factor of safety can be considered as a problem in Linear Programming.

LINEAR PROGRAMMING

In order to formulate the determination of an optimal lower bound solution as a linear programming problem it is necessary to write the equilibrium equations as linear equations in a number of variables, each of which takes values between known bounds. The total factor of safety, F, for which a maximum is sought, is one of the variables. The others are pile force components.

Pile force components

There are 6 unknown force components per pile. However, disregarding the twisting moments, as it is usually done for bridge piers, there are only 3 quantities which take values between known bounds: The axial force, the resulting moment at the pile top, and either the resulting transversal force at the top or a maximum moment in the pile at some depth below the top. Therefore, in order to linearize the problem the following approximation is made: The transversal force and the moments are for each pile assumed to act in the same plane. The directions of these planes are chosen initially and are kept constant during the optimization of F.

The axial force in pile no. r, P_r, is positive as pressure. Its bounds are determined by the resistances Q_r^c in compression and Q_r^t in pull:

$$-Q_r^t \le P_r \le Q_r^c \qquad (1)$$

The simplest case for the transversal force T_r, the moment at the pile top, M_r, and the maximum moment, M_r^1, in the pile is shown in Fig. 1 for a vertical pile. It is assumed in this case that the pile is fixed at the depth d below the pile top, and that it has no lateral earth support above this depth.

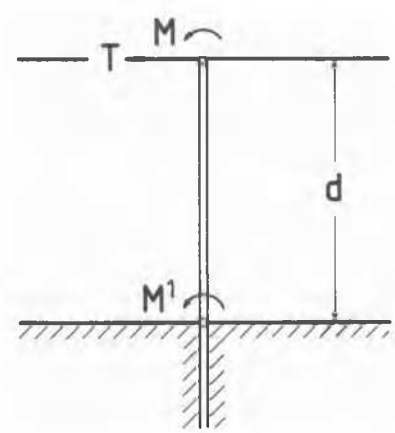

Fig. 1 Pile Fixed at Depth d below Pile Top

If d is small, M_r and T_r may be taken as the unknown quantities with the yield moment, Y_r, and the shearing resistance, S_r, respectively, determining the bounds:

$$-Y_r \le M_r \le Y_r \tag{2}$$

$$-S_r \le T_r \le S_r \tag{3}$$

For sufficiently large values of d, however, the bending moment M_r^1 in the pile becomes more critical than T_r. The unknowns must then be chosen as M_r and M_r^1 with the bounds (2) and:

$$-Y_r \le M_r^1 \le Y_r \tag{4}$$

respectively. In the equilibrium equations it is used that:

$$T_r = \frac{M_r^1 - M_r}{d} \tag{5}$$

Fig. 2 shows a pile in homogeneous soil. In ultimate failure the upper part of the pile above a yield hinge will be deflected laterally, and the soil resistance at failure, p (kN/m), will be developed along this part.

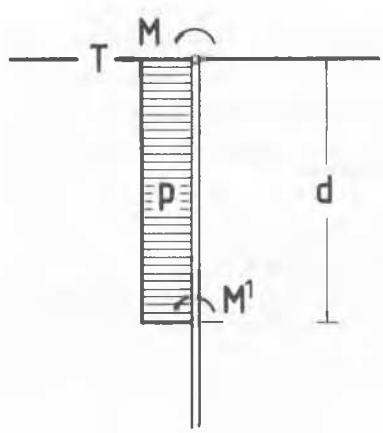

Fig. 2 Pile in Homogeneous Soil

The yield hinge will clearly develop at the depth:

$$d = \frac{T_r}{p} \tag{6}$$

and the moment at this depth is:

$$M_r^1 = M_r + \frac{1}{2} T_r d \tag{7}$$

The bounds (2) and (4) are valid, but T_r is seen not to be a linear function of the two moments. It is, however, on the safe side to use an approximate value of d, determined by:

$$d^2 = \frac{Y_r}{p} \tag{8}$$

together with (5).

Equilibrium equations

If the pile group consists of n piles, the equilibrium conditions can be written as 6 equations with $m = 3n+1$ unknown quantities. With the usual tensor notation:

$$a_{ki} X_k = B_i \tag{9}$$

The first n variables, X_k, are the axial pile forces, P_r, and the next n variables are the moments, M_r. The third group of n variables are either the transversal forces, T_r (for stiffly supported piles), or the bending moments, M_r^1. The last variable, no. m, is the safety factor F. The coefficients to F are the 6 components (with opposite signs) of the total load on the foundation:

$$a_{mi} = -R_i \tag{10}$$

The other coefficients, a_{ki}, are found from the geometry of the pile group, the chosen direction angles, Θ_r, for the planes in which T_r and M_r are assumed to act, and, if M_r^1 are unknowns, also from (5) and possibly (8). The 6 quantities B_i are initially zero.

The problem is now to find a set of values X_k which satisfies (9) and also the conditions (1) - (4), which may be written on the general form:

$$L_k \le X_k \le U_k \tag{11}$$

and which minimizes the function:

$$f = r_k X_k \tag{12}$$

Initially, all coefficients r_k are zero except r_m which is -1. In (11) L_m is zero and U_m is infinite.

Calculation procedure

The description of an efficient calculation procedure to solve this problem, the so-called Simplex method, may be found in a number of textbooks on Linear Programming, e.g. Luenberger (1973). This procedure may be outlined as follows:

1. The optimization is obtained by an iteration process, each step going from one so-called basic feasible solution to another. A basic feasible solution is a set X_k which satisfies (9) and (11), all variables except 6, the basic variables, taking a bound value, L_k or U_k.

2. During the calculations the variables X_k are replaced by the transformed variables X_k^e, e being an indicator which takes the values +1 or -1. The trans-

formed variables are defined by:

$$X_k^{+1} = X_k - L_k$$

and (13)

$$X_k^{-1} = U_k - X_k$$

Thus, only the basic variables X_k^e take values different from zero. X_m^e (i.e.F) will always be one of the basic variables. For this, the indicator e is always +1.

3. The basic feasible solutions are represented by transformations of the equation system (9) and (12): By row operations the coefficients a_{ki} are transformed so that they in each equation (9) are unity for one of the basic variables and zero for the others. In this way the transformed right hand sides B_i indicate the values of the pertinent basic variables X_k^e, the indicator e showing which of the expressions (13) is valid. By row operations, using the equations (9), the coefficients r_k in equation (12) are also transformed so that they are zero for all 6 basic variables.

4. It can easily be seen that in the transformed equation system the coefficients different from zero and unity can be interpreted as:

$$r_k = df/dX_k^e = -dF/dX_k^e \qquad (14)$$

and

$$a_{ki} = -dX_b^e/dX_k^e \qquad (15)$$

where b indicates the basic variable which is represented by equation no. i. In the Simplex method (14) is used to decide in each step which of the non-basic variables to increase, and (15) is then used to find the size of the increment, depending on which of the following happens for the smallest increment:

a. One of the basic variables, X_b^e, decreases to zero, i.e. becomes non-basic.

b. Another variable X_b^e increases to its upper bound, $U_b - L_b$. It also becomes non-basic, but the sign of e should be changed.

c. The non-basic variable, X_k^e, increases to its upper bound. The sign of e should be changed.

5. In cases b. and c. the variable transformation according to (13) implied by the changed sign of e is performed. In cases a. and b., where X_k^e now becomes a basic variable, a row operation is then performed, so that the equation system represents the new basic feasible solution. When all values of r_k have become positive, no further increase of F is possible, and the optimal solution (for the chosen values of Θ_k) has been found.

6. An initial basic feasible solution may be found by assuming initially $F = 0$ and all indicators $e = +1$. The equilibrium equations (9) are satisfied by introducing 6 formal variables Y_j which are the initial basic variables. By an optimization process similar to the above the values of these variables are brought to their lower bounds, which are zero.

If necessary, the calculation may be repeated with another choice for the direction angles Θ_r, seeking in this way to optimize the final value of F.

Final solution

The final transformed equation system (9) and (12) indicates the value of F and also, using (5) and (13), all pile force components. A useful further information is obtained by the fact that, according to (14) the individual coefficients r_k indicate the changes in F caused by changes in the design values for the pile foundation. Thus, if all values of Q_r^c are equal, the sum of all coefficients r_k, for which k indicates an axial pile force at the upper bound, Q^c, will indicate the sensitivity dF/dQ^c. In a similar way dF/dQ^t, dF/dY and, when applicable, dF/dS may be determined.

CALCULATION OF BRIDGE PIER

As an example the pile group supporting the pier called FF 10 for the Faroe Bridge is shown in Fig. 3. The piles are driven as closed steel tubes with 0.71 m diameter into limestone. For

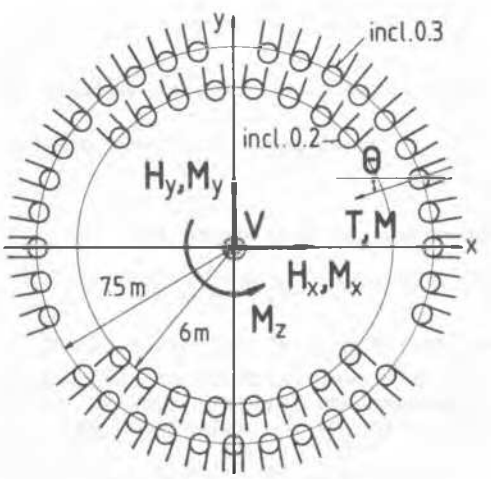

Fig. 3 Pile Group for Faroe Bridge Pier FF 10

all 50 piles are assumed the design values (for normal load cases):

$$Q^c = 4.5 \text{ MN}$$

$$Q^t = 0.88 \text{ MN} \qquad (16)$$

and

$$Y = 1.0 \text{ MNm}$$

The design soil resistance at failure $p = 0.5$ MN/m was estimated. However, the application of (8) and (5) would in this case give unacceptably high values of T_r. Consequently, (3) was used, assuming $S = 0.2$ MN. As an alternative on the safe side the use of (4) and (5) with a formal value $d = 10$ m was also investigated.

The design load case B 093 has the following components:

$$R_1 = V = 158.80 \text{ MN}$$

$$R_2 = H_x = 0.36 \text{ MN}$$

$$R_3 = H_y = 0.00 \text{ MN} \qquad (17)$$

$$R_4 = M_x = 35.03 \text{ MNm}$$

$$R_5 = M_y = 19.14 \text{ MNm}$$

and

$$R_6 = M_z = -0.48 \text{ MNm}$$

The same value of Θ_r is assumed for all piles. Initially $\Theta = 15$ deg was chosen as the mean of the values suggested by the horizontal loads H_x, H_y and the moments M_x, M_y. By repeating the calculations for varying values of Θ it was found, however, that $\Theta = 36$ deg gives the maximum value of F. The results of the calculations, which were performed on a personal computer, HP 85, are summarized in Table I.

TABLE I

Calculation Results

Assumption	Θ deg	F	dF/dQ^c	dF/dQ^t	dF/dY	dF/dS
$Y = 0$	-	0.633	0.118	0.118	-	-
Y, S	15	1.245	0.269	0.000	0.008	0.138
Y, S	36	1.370	0.298	0.000	0.020	0.048
Y, d	15	1.243	0.269	0.000	0.333	-
Y, d	36	1.361	0.298	0.000	0.020	-

As design values of loads and strengths are used, $F \geq 1$ is required. This requirement is not satisfied if the piles cannot transmit moments or transversal forces to the foundation (in this calculation $M_z = 0$ as it cannot then be taken by the pile group).

The pile group was designed by the theory of elasticity with a value of F close to unity. This calculation shows a margin of safety against ultimate failure of at least 30 per cent (this is also valid for the other load cases). This margin does not seem to depend strongly on the value of Y, provided only that Y is greater than zero. In this load case no pile is at its pulling resistance, so $dF/dQ^t = 0$. In load cases with higher horizontal loads this ratio may increase, but it never exceeds the value 0.03.

CONCLUSIONS

When design against ultimate failure of the pile foundation is permitted, as opposed to design against failure in the most critically loaded pile, efficient calculation methods may be obtained by utilizing statically admissible lower bound solutions from the theory of plasticity.

Such methods have been used to arrange pile groups so that they are able to take given total loads. In this paper it is shown that by using the computation technique of Linear Programming they can also be used to find the safety of a given pile group acted upon by a given total load.

REFERENCES

DIF (Dansk Ingeniørforening) (1984). Norm for Fundering. DS 415, pp. 1-67. Teknisk Forlag, København.
(English Translation: Code of Practice for Foundation Engineering).

Hansen, B. (1959). Limit Design of Pile Foundations. Bygningsstatiske Meddelelser, XXX nr. 2, pp. 1-86.

Luenberger, D.G. (1973). Introduction to Linear and Non-Linear Programming, pp.1-356. Addison-Wesley Publishing Company, Reading.

Nøkkentved, C. (1924). Beregning af pæleværker, Diss., pp. 1-248, København

Schiel, F. (1960). Statik der Pfahlwerke, pp. 1-148, Springer-Verlag, Berlin.