INTERNATIONAL SOCIETY FOR
SOIL MECHANICS AND
GEOTECHNICAL ENGINEERING

SIMSG ISSMGE

This paper was downloaded from the Online Library of the International Society for Soil Mechanics and Geotechnical Engineering (ISSMGE). The library is available here:

https://www.issmge.org/publications/online-library

This is an open-access database that archives thousands of papers published under the Auspices of the ISSMGE and maintained by the Innovation and Development Committee of ISSMGE.

Anisotropy of Fiumicino Clay

Anisotropie des Argiles de Fiumicino

L. CAVALERA Dr. Eng., Istituto di Scienza delle Costruzioni, University of Rome
G. SCARPELLI

SYNOPSIS The construction of a network of trenches in the Fiumicino area caused some short term failure phenomena in the surrounding soil. Anisotropy effects in the short term behaviour of a soft clayey soil, appeared to be important to evaluate the in situ undrained shear strength. Laboratory results suggest how the "stress induced" anisotropy is mainly to account for the "in situ" anisotropy. Therefore, the effect of the reorientation of the principal stress directions is evaluated under the plane strain hypothesis, providing a correlation between the anisotropy degree and the soil characteristics. The consequences of assuming an anisotropic yielding criterion in the stability problem are investigated by means of the field of characteristics method. The main results obtained for the assumed anisotropic dishomogeneous medium are presented for different values of the anisotropy degree.

INTRODUCTION

In the stability analyses the soil is usually assumed to be isotropic as regards its strength in the short and long term.

When the dissipation of the induced over-pressure makes safety increase with time, small safety factors are usually allowed. In this case, the presence of some factors such as the undrained strength anisotropy or the strain-rate may have considerable effects on the structure stability, (Bjerrum, 1973).

Empirical correlations are currently applied in order to evaluate the correct values of the in situ shear strength, even though they are not always representative of the observed phenomena.

This paper deals with the effect of the strength anisotropy of clay on stability analyses from a theoretical point of view only. The short term behaviour in terms of total stresses is thus described by an analytical model.

EXPERIMENTAL AND THEORETICAL REMARKS

The construction of a network of trenches for collecting surface waters at Fiumicino has suggested a research on theoretical models for evaluating the stability of trenches dug in soft clay, when its upper crust is dried and fissured (Burghignoli, Calabresi, 1977). Actually some failures occurred in these canals immediately after excavation and so a back analysis of the stability was performed.

Traditional limit equilibrium methods of analysis were applied to excavations having different forms and sizes which enabled a critical evaluation of the laboratory and in situ observations on clay behaviour.

The critical failure surfaces corresponding to the lower safety factor values are in good agreement with the observed movements. However, since the safety factor values are somewhat higher than one, the vane test strength values introduced in the analysis, have somehow overestimated the real clay strength.

It is generally accepted that the effects produced by the viscosity and anisotropy of clay are the main responsibles for such discrepancies (Bjerrum, 1973). They can be taken into account by means of the empirically derived correction factors suggested by Bjerrum(1973) on the basis of in situ observations. This approach has some limitations even though at present it represents the best practical solution for the stability evaluation of embankments, or unsupported excavations in soft clays. It results that the time correcting factor μ_R and the estimated anisotropy effect depend only on the plasticity index (Fig.1).

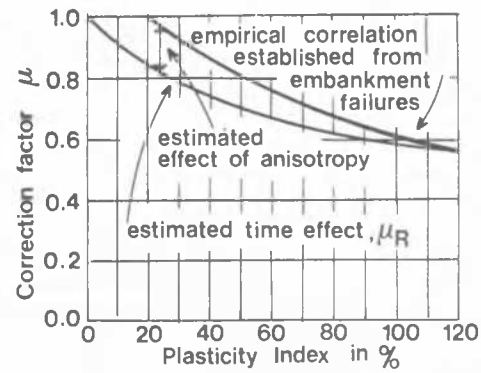

Fig. 1 - Empirically established correction factors to be applied to the vane tests to predict the undrained shear strength (after Bjerrum, 1973).

It is worth noting that a generally valid procedure should introduce an anisotropy correction factor μ_A varying along a sliding surface with the failure plane orientation. This was supported by Bjerrum (1973) in the following expression:

$$c_u(\text{field}) = c_u(\text{vane}) \cdot \mu_R \cdot \mu_A \qquad (1)$$

in which μ_A should be evaluated from laboratory undrained tests on undisturbed samples which were anisotropically consolidated at the same stresses as those carried in the field.

A series of simple shear tests on the Fiumicino-clay samples, trimmed at different inclinations provided an evaluation of the anisotropy. Due to the highly plastic behaviour of the Fiumicino-clay, slight importance had been ascribed to such phenomena in the previous stability analyses which actually had been performed by using the uncorrected vane test values. However when this approximation is used, the safety factors seem to be increased by anisotropy effects (Bjerrum, 1973). The curve of the global correcting factor μ, lies infact above the μ_R curve which includes time effects alone. Indeed the analysis of the experimental results suggests that the solution to the stability problem depends on both the vane test value and on the position of this value between the minimum and the maximum shear strength observed along the sliding surface.

Experimental results collected by Lo(1965) are reproduced in the following Table together with those obtained for the Fiumicino-clay. They all seem to confirm that the in situ strength measurements obtained through the vane test provide values that are close to the lowest ones which can be obtained on undisturbed laboratory block samples; sometimes they can approximate the strength values resulting from a triaxial extension test.

TABLE I

Comparison of undrained strength from vane and triaxial tests on normally consolidated clays

Type of the soil	Welland clay Z = 13 mt	Welland clay Z = 19 mt	Fiumicino clay Z = 7 mt
Water content W %	21	32	62
Liquid Limit W_L %	27.5	44	80
Plastic index I_p %	11.5	22.5	40
Ratio between c_u vane and c_u from CK_oUC triaxial test	0.72	0.765	0.83
Ratio between c_u vane and c_u from CK_oUE triaxial tests	0.95	0.96	1.07

It is clearly evident that the evaluation of the anisotropy effects may be altered by the chosen experimental procedure.

Moreover it is generally acknowledged that the anisotropic behaviour of a soft clay results from an "inherent" anisotropy related to the fabric configuration, and from a "stress-induced" anisotropy, related to the change in the boundary stress conditions. Therefore, the use of a remoulded property (I_p%) for characterizing the anisotropic behaviour of soft clays has been recently questioned (Simon, Menzies, 1978), because the inherent anisotropy effects are neglected. However, as outlined by Ladd et al. (1977), the undrained shear strength variation, observed in soft clayey soils, is mainly due to the stress induced anisotropy.

Consequently, the empirical approach evaluating the reorientation effects alone, which seems to be limited by the experimental procedure to which it refers, should be overcome by an analitical approach. With this purpose a theoretical model has been worked out, according to which it is possible to evaluate how and to what extent the anisotropy effect may be of relevance in a stability analysis.

TEST RESULTS

The experimental results refer to the Fiumicino-clay; some of its properties are summarized in the preceding Table.

The tests which were carried out with the Norwegian simple shear apparatus were constant volume shear tests, preceded by anisotropic consolidation. The samples taken at inclinations of 0°, 45°, 90° were reconsolidated so as to reproduce the pre-existing stresses on the shear plane. The failure stage, where no volume variations occur, was obtained by means of constant strain-rate tests ($\dot{\gamma}$ = 18% / h), run in the direction of the consolidation shear stress and in the opposite direction so as to simulate the limit situations that might occur along a hypothetic failure surface.

The observed strength values, expressed as τ_{cr}/σ'_{1o} where τ_{cr} is the shear stress that corresponds to the yielding of the material and σ'_{1o} is the normal pressure acting on the failure plane, are illustrated in fig.2.

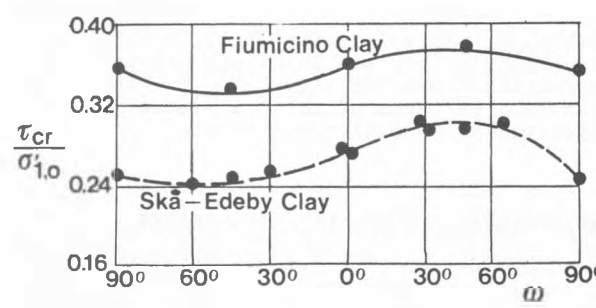

Fig. 2 - Shear strength variation observed in the Fiumicino clay samples by simple shear test. Comparison with Bjerrum results observed on the Ska Edeby clay.

The normalized strength is a function of the angle ω between the failure plane and the reference axis taken as being horizontal. The results show that the values of the measured strength vary with the failure plane orientation: the minimum value is 78% of the maximum which was found for 45° degrees in the active case.

THEORETICAL MODEL

As previously mentioned, the "induced" anisotropy effect derives from the reorientation of the principal stress directions which, due to the change in the boundary stress conditions, follows an anisotropic state of consolidation.

Its influence on the undrained strength, was previously dealt with by Hansen and Gibson(1949), and by Duncan and Seed (1966); in both works the intrinsic soil parameters c' , ϕ' , A_f (the pore pressure Skempton parameter) were assumed to be isotropic. Their analyses were restricted to the plane stress case.

By introducing a general expression for the pore pressures that arise in undrained conditions, it is possible to extend similar considerations to tridimensional problems, such as the triaxial stress and the plane strain systems. The pore pressure increments Δu in saturated soils are a function of the first and second invariant I_1 and I_2 of the stress increments $\widetilde{\Delta\sigma}$, according to the expression: (Henkel, 1958)

$$\Delta u = \frac{1}{3} I_1(\widetilde{\Delta\sigma}) + a\, I_2(\widetilde{\Delta\sigma}) \qquad (2)$$

in which the parameter a is assumed as being independent from the load path. The Mohr criterion is supposed to be valid and the isotropy of the c' , ϕ' , a parameters is maintained.

By means of Mohr's circles for the graphical representation of the states of stress (Fig.3),

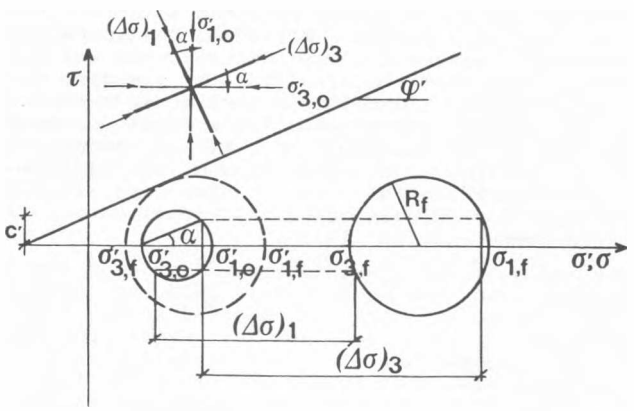

Fig. 3 - Rotation of the principal stress directions after anisotropic consolidation.

it is inferred that by simply assuming that the pressure increment depends on the first two invariants of the applied stress increment, anisotropy of the undrained shear strength results each time that the initial state of stress is not isotropic, in particular when $\sigma'_{3o} = K_o\sigma'_{1o}$. A 3rd degree equation is obtained from the equality between the radius of the Mohr's circle at failure, and the radius of the circle obtained by adding a stress increment to the initial state of stresses, characterized by σ'_{1o} and σ'_{3o} :

$$[\sigma'_f] = [A^T][\sigma'_{in}][A] + [\Delta\sigma] - [\Delta u] \qquad (3)$$

in which: $[\sigma'_{in}]$ represents the effective initial state of stresses; $[\sigma'_f]$ is the failure stress tensor, [A] is the director cosines matrix; $[\Delta\sigma]$ is the total stress increment; $[\Delta u]$ is the isotropic tensor of the pore pressure increment. For the triaxial case, the term $[\Delta\sigma] - [\Delta u]$ in the right-hand side of the equation (3) is:

$$[\Delta\sigma] - [\Delta u] = \begin{bmatrix} (\frac{2}{3} - a\sqrt{2})\,\delta & 0 & 0 \\ 0 & -(\frac{1}{3} + a\sqrt{2})\,\delta & \\ 0 & 0 & -(\frac{1}{3} + a\sqrt{2})\delta \end{bmatrix}$$

where δ represents the difference between the maximum and the minimum principal stress increments. For the plane strain case the same term becomes:

$$[\Delta\sigma] - [\Delta u] = \begin{bmatrix} (\frac{1}{2} - a\sqrt{\frac{3}{2}})\,\delta & 0 & 0 \\ 0 & -a\sqrt{\frac{3}{2}}\,\delta & 0 \\ 0 & 0 & -(\frac{1}{2} + a\sqrt{\frac{3}{2}})\,\delta \end{bmatrix}$$

in which the soil is assumed to have an elastic behaviour in order to evaluate the intermediate principal stress increment: $\Delta\sigma_2 = \frac{1}{2}(\Delta\sigma_1 + \Delta\sigma_3)$.

From the preceding equations, where the stress increment deviator at failure, δ_f , is unknown, it is possible to obtain the value of the failure circle radius, that is to say the undrained shear strength c_u ; it appears to be a function of: the initial stresses; the effective strength and the pore pressure parameters c' , ϕ' , a ; the angle ω ,(Cavalera, Scarpelli, 1980).

In order to summarize the results obtained from the analysis, a degree of anisotropy has been defined:

$$G = 1 - \frac{c_u\ \text{min.}}{c_u\ \text{max.}}$$

Its trend, versus the parameters c', ϕ', a , in the plane strain condition, is indicated in Figs. 4a and 4b for the c'=0 and c'≠0 cases respectively. It results that G decreases when c' increases or ϕ' decreases, thus indicating a correlation between G and I_p which is very close to the empirical correlation in Fig.1 .

In view of the following development, it must be pointed out that for c' = 0 the function c_u/σ'_{1o} does not depend on the principal stresses during consolidation: σ'_{1o} , σ'_{3o}.

ANALYTICAL SOLUTION TO STABILITY PROBLEMS

According to the previous considerations, when the watertable lies at the ground level, the shear strength in terms of total stresses, can be expressed as

$$c_u(\omega) = f(\omega)\cdot(\gamma_b \cdot z + c_o) \qquad (5)$$

where c_o is the cohesion value for z = 0 , and f(ω) is the anisotropy function.

The independence of the yielding criterion from the mean pressure p , is implicitly assumed in the preceding equation, while the hypothesis of

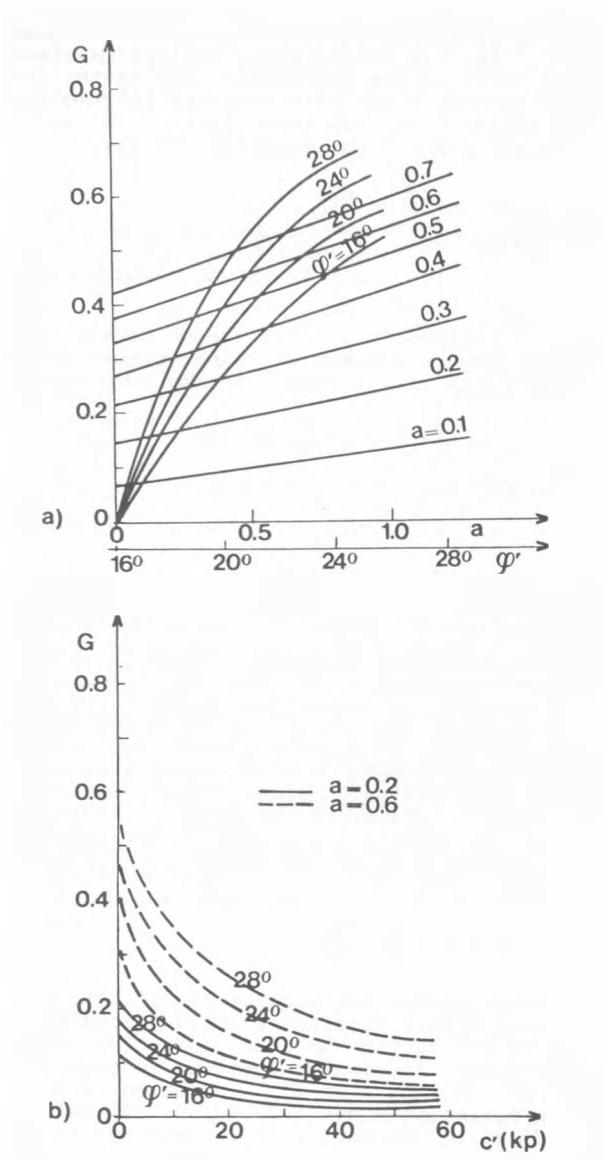

Fig. 4 - Influence of the friction angle ϕ' and of the overpressure parameter a on the anisotropy degree G, (Fig.4a). Influence of the cohesion c' (Fig.4b).

perfect plasticity is still required to describe the clay behaviour. Anisotropy effects together with the dishomogeneity influence - as inferred from equation (5) - can be examined by means of a lower bound approach.

By combining the equilibrium equations and the failure criterion, the equations describing the state of stress in a cohesive anisotropic dishomogeneous medium are proved to be of the hyperbolic type.

It is therefore possible to determine, by means of numerical procedures, the network of characteristic curves obtained by linking the points where both the equilibrium and the yield conditions are satisfied. The stress characteristics are given by the following equations:

$$\left(\frac{dz}{dx}\right)_{\pm} = \mathrm{tg}\left(\Psi - m \pm \frac{\pi}{4}\right) \qquad (6)$$

where Ψ represents the angle that the principal maximum direction forms with the reference direction, taken as being horizontal, and where m, defined by

$$\mathrm{tg}\, 2m = \frac{1}{2c_u} \cdot \frac{\partial c_u}{\partial \Psi} \qquad (7)$$

takes into account the anisotropy of the yielding criterion. Furthermore, the variation of the stresses along the characteristic lines is provided by the following differential equations:

$$dP \pm \frac{2\, c_u}{\cos 2m} = \left[\left(\frac{dz}{dx}\right)_{\pm} \cos 2\Psi - \sin 2\Psi\right] \frac{\partial c_u}{\partial z}\, dx + \gamma dz \qquad (8)$$

In the foregoing expressions the "+" sign is valid for characteristic lines of the β type, and the "-" sign for those of the α type. They are a generalization of the equations applying to isotropic and dishomogeneous media (Booker, Davis, 1972a) where $\partial c_u/\partial\Psi = 0$ and $\partial c_u/\partial z \neq 0$, and for anisotropic homogeneous media, where $\partial c_u/\partial\Psi \neq 0$ and $\partial c_u/\partial z = 0$, (Booker, Davis, 1972b).

A numerical solution of the system of differential equations (6)-(8) has been obtained by the finite difference integration method that Sokolowsky suggested (1965) for homogeneous isotropic media.

Some significant results are reported in Fig. 5 for different values of G, including the case of G = 0, which coincides with the solution provided by Davis and Booker (1973). The anisotropy degree influences the load distribution and the network extension required for the yielding of a soil volume, limited by a horizontal surface. In particular, the plasticized volume, (crossed by the stress characteristic field), decreases as G increases, the extension of the passive limit zone being the same. Similar results were obtained for homogeneous-anisotropic media, (Greenstain, Livneh, 1974).

The influence of the anisotropy degree on the finite slope angles and their relevant stress field characteristics are reported in Fig.6 by assuming $c_0 = 0$ in equation (4). This hypothesis allows a comparison with some correlations of practical use, that Booker and Davis obtained for their soil model. They show that the safety factors given by an upper bound approach (slip circle analysis) are increasingly higher, when compared with a lower bound solution assumed as being exact, as the slope angle β decreases (Davis, Booker, 1973).

The anisotropic model results are compared in the ρ/γ, β plane, with those obtained for the isotropic medium. The ratio ρ/γ represents the material strength, when $\rho = \partial c_u/\partial z$ is the cohesive increasing rate with depth and γ the bulk modulus for the same value of β, the ratio ρ/γ is greater, the higher the anisotropy degree (Fig.7). It is worth noting that in the above mentioned comparison the maximum value of the shear strength in assumed as being the same in both isotropic and anisotropic cases. For the Fiumicino clay, whose characteristic values are G = 0.22 and $\rho/\gamma = 0.13$, the theoretical slope angle is $\beta = 14°$. In the hypothesis of an isotropic behaviour, the same

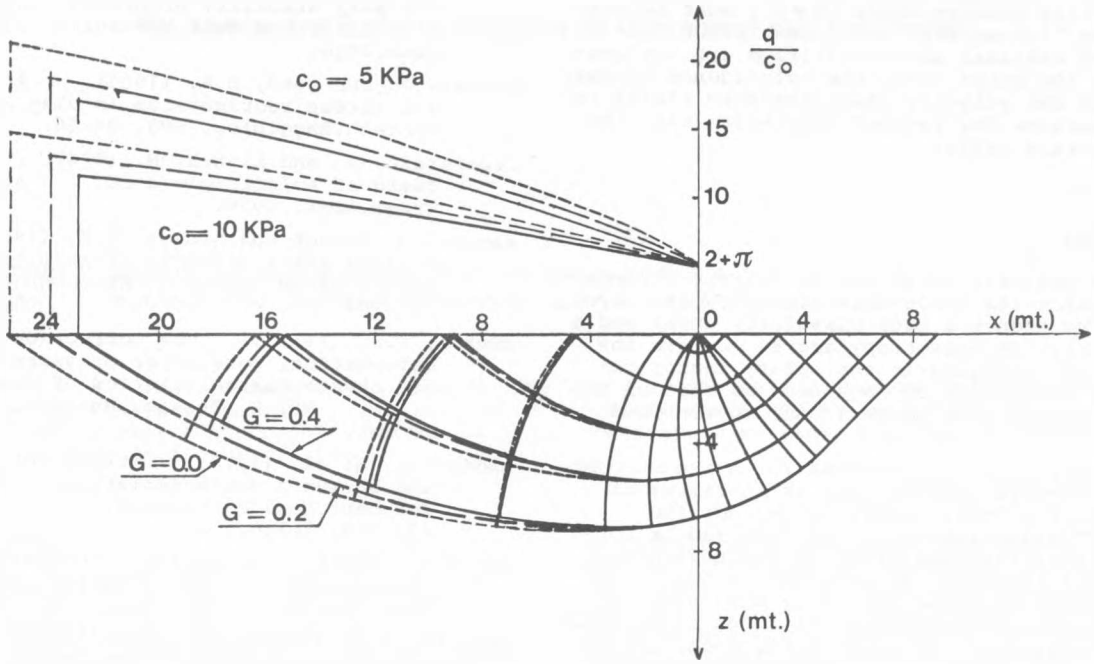

Fig. 5 - Stress characteristic fields and surface loadings for different anisotropy degree values G and different initial cohesion c_o .

analysis provides $\beta = 18°$.

The solutions obtained from conventional methods for purely cohesive dishomogeneous soils (slip circle analysis), and those provided by plasticity analyses, are compared in Fig.8 for different values of G (anisotropy degree). Davis and Booker showed that in a practical range of values of the ρ/γ ratio (0.065 ÷ 0.16) the slip circle analysis overestimates the soil bearing capacity with a maximum 10% error. This is in accordance with the upper bound nature of the method; but if an isotropic model is used, a higher maximum error is obtained (Fig.8). A 2% error applies to the Fiumicino clay, when the effect of anisotropy is neglected; while 17% is obtained in the opposite case.

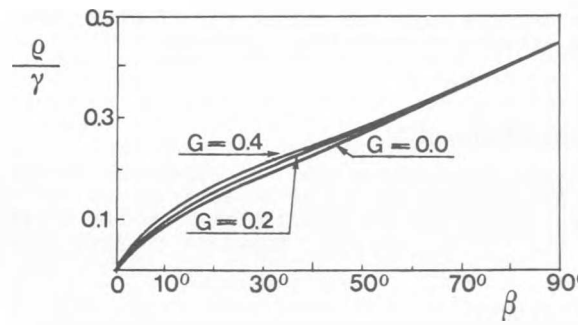

Fig. 7 - Plasticity solutions for different ρ/γ ratio and anisotropy degree values.

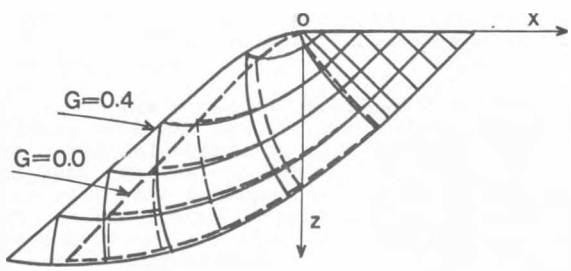

Fig. 6 - Slope angles and relevant stress characteristic fields for two anisotropy degrees.

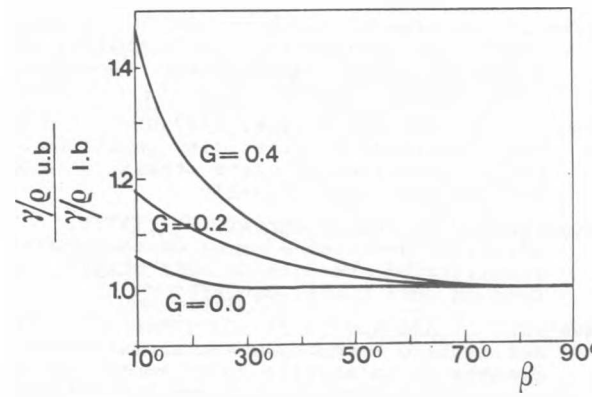

Fig. 8 - Error in the slip circle analysis for different anisotropy degree values.

It is worthwhile observing that the solutions to the stability problem where $G \neq 0$, must be considered as "incomplete" solutions, since kinematic and statical admissibilities are not provided. On the other hand, the coincidence between the stress and velocity characteristic fields is ensured because the assumed hypotheses make the normality rule valid.

CONCLUSIONS

The above analysis shows how anisotropy effects can influence the short-term stability of clayey soils. Even though a high plasticity index and a consequently low anisotropy degree G are involved, the variation in the safety factor can be of the same order of magnitude as that of the margins derived from conventional upper-bound solutions.

Moreover empirical corrections which are derived from the in-situ observations as functions of the plasticity index appear to neglect the "inherent" anisotropy which in fact can be considered of little importance in the evaluation of the soil response. Neverthless, geometrical features, as the slope angles or the shape of the critical surfaces should be taken into account for the influence they have on the magnitude of the reorientation of the principal stress directions.

An effective stress analysis, taking into account the real distribution of the pore pressures that arise at failure seems to be more appropriate for dealing with the anisotropy of clays and its effects on stability problems.

ACKNOWLEDGEMENTS

The AA. acknowledge Prof. G. Calabresi and Dr. A. Burghignoli for their supervision of the work, which was financially supported by a grant of the Italian National Research Council,(C.N.R.).

REFERENCES

Bjerrum, L. (1973). Problems of soil mechanics and construction on soft clays. Proc. 8th Int.Conf.Soil Mech.Found.Engg., (3), 11-159, Moscow.

Booker, J. R. and Davis, E.H. (1972a). A note on plasticity solutions to the stability of slopes in inhomogeneous clays. Géotechnique, (22), 509-513.

Booker, J.R. and Davis, E.H. (1972b). A general treatment of plasticity solutions under conditions of plane strain. J.Mech. Phys.Solids, (20), 239-250.

Burghignoli, A. and Calabresi, G. (1977). The effect of desiccated crust on the short-term stability of trenches in soft clays. Int. Symp.on Soft Clays, Bangkok.

Cavalera, L. and Scarpelli, G. (1980). Effetto dello stato tensionale sulla resistenza non drenata di un'argilla normalmente consolidata. A.G.I., Rivista Italiana di Geotecnica, (3).

Davis, E.M. and Booker, J.R. (1973). Some adaptation of classical plasticity theory for soil stability problems. Symp. on Plasticity and Soil Mechanics, 22-41, Cambridge.

Duncan, J. and Seed, H.B. (1966). Anisotropy and stress reorientaion in clay. ASCE J. Geotech.Engg.Div., SM5, 21-50.

Greenstain, J. and Livneh, M. (194). Slip line field of anisotropic soil. J.Appl.Mech. Trans.ASME, June.

Hansen, J. Brinch and Gibson, R.E. (1948). Undrained shear strength of anisotropically consolidated clays. Géotechnique, (1), 184-204.

Henkel, D.J. (1958). The correction between deformation, pore water pressure and volume change characteristics of saturated clays. Ph. D. Thesis, University of London.

Ladd, C.C. et al. (1977). Stress deformation and strength characteristics. Proc. 9th Int.Conf.Soil Mech.Found.Engg., (2), 421-494, Tokyo.

Lo, K.Y. (1965). Stability of slopes in anisotropic soils. ASCE J.Geotech.Eng.Div., SM4, 85-106.

Menzies, B.K. and Simons, N.E. (1978). Stability of embankments on soft ground. Developments in Soil Mechanics-1. Applied Scienc Publ., Ed. Scott, 393-435.

Sokolowsky, V.V. (1965). Statics of granular media. Oxford: Pergamon Press.