Geotechnical Aspects of Underground Construction in Soft Ground – Viggiani (ed)
© 2012 Taylor & Francis Group, London, ISBN 978-0-415-68367-8

Face stability control for EPB tunnels in a non homogeneous till formation with highly permeable layers

A. Graziani & A. Lembo-Fazio
University Roma Tre, Rome, Italy

M. Moccichino & P. Romualdi
SELI S.p.A., Rome, Italy

ABSTRACT: Glacial till section of the Canada Line EPB tunnels in Vancouver experienced some disruption during the excavation, owing to the presence of soft layers of loose sand with abundant water recharge, which gave origin to difficult conditions of mixed face. A careful adaptation of the muck conditioning system was required in order to obtain a low permeability and a regular distribution of pressure inside the excavation chamber. The influence of muck permeability on face stability was investigated by 3D Finite Difference models. Conventional analyses, in which the pore pressure distribution at face is a-priori assumed, were initially performed. A modelling approach in which also the conditioned soil inside the excavation chamber and the screw conveyor is represented was then explored. It was demonstrated that a muck permeability at least equal to the in-situ permeability of the soft ground layer is sufficient to virtually eliminate the drawdown effect associated to the excavation advance.

1 INTRODUCTION

This paper analyzes face stability problems in EPB tunnels on the base of the experience acquired during the excavation of a stretch of Canada Line in Vancouver, BC, Canada. The problems at hand encompass possible technological solutions as well as geotechnical modeling issues for a typical case of mixed face, owing to the presence of a soft layer of higher permeability.

Technical issues mainly concern the research of optimal parameters for muck conditioning in order to properly transfer face support pressure and avoid water loss through the screw conveyor. Past experiences and field testing of muck properties and pressure distribution (Bezuijen & Schaminee, 2001, Bezuijen et al., 2005, Hashimoto et al., 2009) represented the base for the experimental investigations carried out at the construction site.

Insight into the behavior of conditioned soil inside a system as complex as an EPB machine was also provided by scale model tests (Merrit & Mair, 2006, Vinai et al., 2008).

The modeling approaches applied in this paper belong to the category of 3D numerical models for seepage-mechanical analysis. In this framework, the collapse mechanism of the tunnel face has been investigated by a progressive reduction of the support pressure. The results can be compared to the limit equilibrium method (Anagnostou & Kovari, 1996).

2 CASE STUDY

2.1 *Canada Line in Vancouver*

The Canada Line is a rapid transit system recently completed in Vancouver for the 2010 Winter Olympics. The bored tunnel section consists of 2.45 km of twin bored tunnels and 3 stations. The tunnels were driven with a 6 m diameter Earth Pressure Balance Tunnel Boring Machine (EPBM) and lined with 250 mm thick, 5.3 m diameter, 1.4m length precast concrete segments. Unforeseen difficulties occurred while boring the 750 m stretch through glacial and interglacial deposits of sand, silt, and clay with granitic boulders.

The bored tunnels pass under a lateral branch of the Vancouver bay (False Creek) and the Downtown area (Fig. 1).

Sloping down (5.5%) the alignment reaches its first lower spot roughly in the middle of False Creek. Hence, it commences to rise, reaching False Creek's North shore and then smoothly arrives in Yaletown Station. The tunnels continue along Davie Street on a northwesterly bearing to the point where, just under the Brava Towers buildings, they curve right through 90 degrees onto a northeasterly bearing.

Approximately in the middle of the False Creek, the geology changes turning from sandstone into the overlying glacial deposits (till). Midway through the curve on Brava Towers, the tunnels turn back into sandstone bedrock.

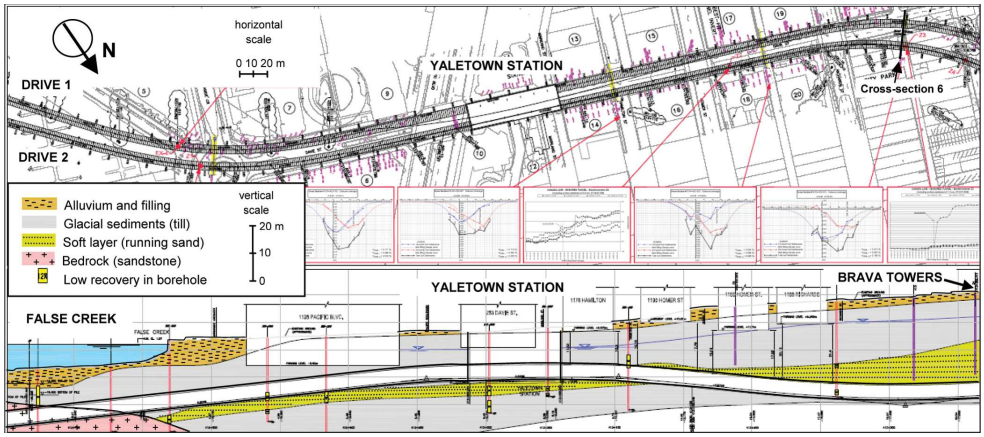

Figure 1. Plan of Canada Line from False Creek to Brava Towers and geological profile along tunnel alignment (ratio of vertical to horizontal scale, 1:2).

2.2 *Geological situation and geotechnical investigations*

The Early Tertiary sandstones and siltstones are massive and jointing is poorly developed or absent.

The till consists of a clay-silt-sand matrix with gravel and very strong cobbles and boulders up to several meters in diameter.

During the Quaternary Period, within the last 1 million years, the Vancouver area was intermittently covered by thick ice of glaciers. The ice sculpted the landscape and deposited a variety of glacial and non-glacial sediments which include thick complex units of glacial till and stratified drift deposited beneath, and at the margins of the ice.

The more difficult geomechanical conditions correspond to a situation frequently faced while boring from False Creek to Brava Towers, which was characterized by the presence of significantly continuous layers of high permeability loose sand.

Evidence of the wide spread and continuity of such a soft inclusion with abundant water recharge was obtained during the drillings for the pile sheet of Yaletown Station.

Sonic drillings, vertical profiles of grain size distribution and borehole tests (pressuremeter, SPT and hydraulic conductivity testing) gave further indications about the geotechnical properties (Table 1) and the typical thickness of the soft inclusions, which could thereafter soundly be represented as a continuous layer. Where this layer intersects the tunnel section, a typical case of mixed face conditions occurs.

Table 1. Geotechnical properties of soils.

	Strong till	Weak till	Silt	Sand
Unit weight, γ (kN/m^3)	21.5	21.5		
Porosity, n (-)	0.3	0.3		
Shear modulus, G (MPa)	170	60		
Elastic modulus, E'(MPa)	425	150	65	
Cohesion, c′ (kPa)	100	25		30
Friction angle, φ′ (°)	40	38		32
Undrained cohesion, c_u (kPa)	800	200		
Permeability, k (m/s)	10^{-8}–10^{-7}	10^{-8}–10^{-7}		10^{-5}

3 PROBLEMS DURING EXCAVATION AND ADOPTED SOLUTIONS

3.1 *Drive 1*

The EPBM started boring the Outbound tunnel (Drive 1) from S-E. Favourable conditions of strong impermeable till lasted for approximately 300m to just beyond Yaletown Station. Regular cutting head inspections and tool changes could be made in normal (atmospheric) conditions. Surface and building settlements were limited to 1 or 2mm with minimum cover of 12 m to the crown of the tunnel and water table approximately 8m below surface. A face support pressure of approximately 1 bar was maintained throughout.

After Yaletown, the muck was noted to contain increasingly higher proportions of wet sand and silt. The next intervention revealed a layer of wet sand within a stronger till matrix that could not be supported in normal atmospheric conditions due to the mobilization of groundwater.

In this area, there was more than 20 m head of water above the crown. At this stage the face support pressure was increased to prevent the possibility of over excavation. Pressing forward, the penetration rate continued to decrease with increased thrust and it became clear that the cutting tools were at the end of their useful life.

In these conditions. After approximately twenty advances in extremely poor ground conditions of silt and sand, where face interventions were not possible even with compressed air, the ground conditions became better with the volume of water decreasing significantly. Throughout the soil section, the ground was conditioned with foam to work the muck into a low-permeability paste to properly transfer face support pressure.

However, this conditioning was less than ideal and the material would flow through the screw conveyor if not mechanically managed by partial closure of the guillotine door. There was significant concern that the machine could become immobilized as it entered the soil/sandstone interface under Brava Tower, where further problems such as nested boulders or inclusions of poor ground were expected.

The decision on how to continue the drive under the highest risk section was based on a number of factors: (i) the settlement readings in all buildings along this section had remained very low (less than 4 mm); (ii) analysis of the Brava Tower structure showed that with a settlement of 9 mm of an individual footing, the stresses in the structure would increase only by 10%; (iii) experience had shown that adequate ground control (low loss of ground) could be achieved even with worn cutting tools.

Considering all facts, a calculated risk was taken to continue the drive. The TBM under passed the building (34 advances) in less than 5 days with the penetration rates reducing from 50 to 30 mm/min. The maximum settlement experienced at any footing was 6 mm (Fig. 2).

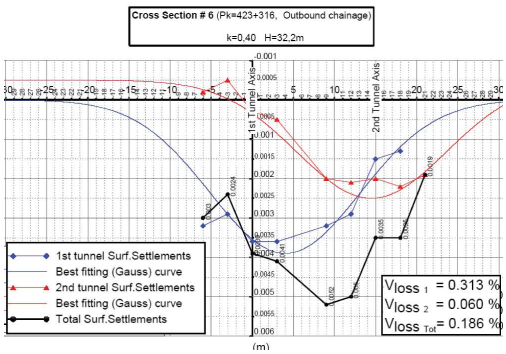

Figure 2. Example of surface settlements measured during tunnel excavation (Cross section #6).

3.2 *Design upgrade and experimental section*

The results achieved during Drive 1 provided the basis for improvements for Drive 2. In particular, several mitigation measures were taken, such as:

1. Tunnel separation increased by 1 diameter (from 12 m to 18 m) underneath the Brava Towers.
2. Use of cutting tools with a mixed-face configuration (ripper teeth and cutters).
3. Automatic grout line cleaning and polymer injection added to the original conditioning system.
4. Additional 24-hour monitoring (surface, buildings, and extensometers) for critical sections.
5. Locating maintenance areas based on the Drive 1 records, where safe and "open face" cutting head maintenance might be possible.
6. Specialized crew for hyperbaric intervention continuously available on site.

In the critical section, beyond Yaletown station, the principal criterion used for the EPB pressure calculation was to counter balance the water table pressure and add 20 kPa as a safety buffer. The pressure was progressively raised from 150 kPa to 200 kPa, reaching a maximum of 220 kPa near Brava Towers.

In addition, an experimental section was successfully driven with high face support pressures (up to 2 bar) before approaching the station to check the TBM performance and determine the appropriate soil conditioning parameters.

Variations of water flow, foaming agent and polymer concentration were investigated through slump tests, permeability tests, and visual inspections of the muck.

Slump tests did not depend on excavation pressure while muck density recorded 13 to 15 kN/m^3 values. High EPB pressure required high surfactant percentage (TA, 1.0–1.2%), low water flow in the excavation chamber and high Foam Injection Rate (FIR, 110–140).

Eventually, the selected conditioning parameters granted reaching a permeability of the excavation spoil ranging from 10^{-9} to 10^{-8} m/s, producing a pulpy and water-tight paste (slump, 15–20 cm).

3.3 *Drive 2*

Excavation reached smoothly the Yaletown Station box, which provided the opportunity to fully refurbish the cuttinghead.

At the first maintenance area 70m from the station, the sand layer was found to be approximately 2 m deep and half way up the face with hard till (with boulders) above.

Excavation continued as planned even into a unforeseen full face of sand. Unlike the first drive, the high operating pressures could be maintained and the ground was properly conditioned using only foam. The assumptions about a short

section of "good" ground for the second maintenance area proved to be correct too.

The third maintenance area, shortly before the alignment entered the footprint of the Brava Towers, was again planned adjacent to a very short section of "good" ground experienced in Drive 1. The 2 hour intervention at this location began with a steady flow of water coming from the sand layer that started to cause sloughing of the ground above the crown of the machine. The intervention was abandoned but revealed that the cutting tools were in relatively good condition. The construction team made the decision to complete the drive without further planned stops, until the TBM was fully into the sandstone.

The machine advanced at an average of 12 rings per day (17m), at 2.2 bar face support pressure at the top of the cutting chamber and 2.7 bar at inlet to screw conveyor.

4 HYDRO-MECHANICAL MODEL

4.1 *General features*

Although it is likely that more than a single layer exists, possibly with additional minor inclusions and lenses of limited extent, to keep the model as simple as possible a unique layer was considered. The thickness of the soft layer was fixed equal to 1.5 m, that is D/4 (where D is the tunnel diameter, equal to 6 m), while its position within the face was varied.

On the basis of the baseline geotechnical characterization and the additional investigations carried out during tunnel construction (Table 1), the two materials which compose the calculation model were given the parameters listed in Table 2. The parameters of the till formation represent the average properties of an ideal medium formed by randomly alternated strata of weak and strong till.

Table 2. Model parameters.

	1) Till formation	2) Sandy layer
Bulk unit weight, γ (kN/m^3)	21.5	21.5
Porosity, n (-)	0.3	0.3
Shear modulus, G (MPa)	120	24
Elastic modulus, E' (MPa)	300	60
Poisson ratio, ν' (-)	0.25	0.25
Cohesion, c' (kPa)	20	0
Friction angle, φ' (°)	40	30
Dilation angle, ψ (°)	0	0
Permeability, k (m/s)	10^{-8}	10^{-6}

The material model assumed in the following analyses is the linear elastic perfectly plastic model with Mohr-Coulomb strength criterion. The behaviour of the water-saturated porous medium during excavation advance was represented by a two-phase approach. Only the drained elastic moduli and the drained strength parameters are therefore required, while the undrained behaviour is governed by the water bulk modulus ($K_w = 2$ GPa), porosity and the solid skeleton bulk modulus.

The initial stress conditions in the soil mass were obtained by assuming a unit weight of the rock mass of $\gamma = 21.5$ kN/m^3 and a coefficient of lateral pressure at rest $K_0 = 0.5$. Pore pressures have a hydrostatic distribution.

The tunnel reaches its section of minimum overburden (about 15 m) at the chainage of Yaletown Station, whilst the maximum overburden (about 30 m) corresponds to the under passing of Brava Tower, near the end of the soil section of the tunnel. The model (Figure 3), refers to the section of minimum overburden, with the undisturbed water table at 6 m depth from the ground surface. The grid represents a half of a single tunnel, with the face located midway of the longitudinal length of the grid.

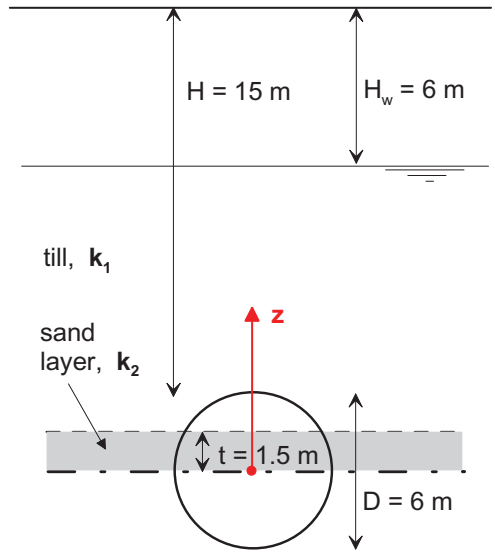

Figure 3. Typical cross-section of tunnel with the sand layer positioned in the first upper half the face.

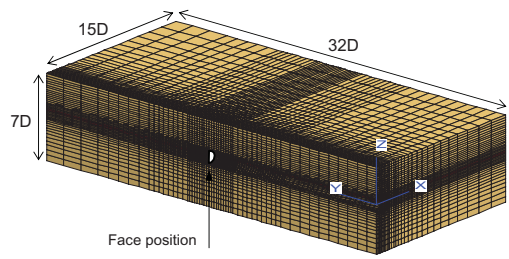

Figure 4. General layout of the 3D model grid.

4.2 *Preliminary analyses of face stability*

The gradual increase in ground deformation and loads on the EPB shield during tunnel excavation is associated with the stress redistribution taking place in the vicinity of the advancing face and with the consolidation process in the ground surrounding the tunnel. Time-dependent consolidation processes are particularly relevant for tunnelling through water-bearing, low-permeability ground.

Around the EPB shield, plastic deformation and remoulding of the saturated ground also occur. In a low-permeability ground, the water content cannot change immediately after excavation. Instead, excess pore pressures develop, which dissipate over the time. In case of non-hydrostatic in situ stress ($K_0 \neq 1$), pore pressure change along the tunnel wall can be negative as well positive.

Stability analyses are frequently carried out for two idealised situations: the short-term conditions ($t = 0$), characterised by the undrained behaviour of the porous medium, and the long-term conditions ($t = \infty$), in which a stationary pore pressure distribution is reached.

In any case, tunnel excavation causes a transient seepage flow process. If the excavation proceeds slowly or the permeability is relatively high, the conditions can also be practically drained since the short term. More in general, the hydro-mechanical response at the tunnel face is governed by the ratio of excavation rate v_a to ground permeability k (Anagnostou 1995).

In case of layered ground, the situation becomes even more complex, because the characteristic times for pore pressure equalization can be very different for materials of markedly different permeability.

The proposed modelling approach is based on the application of three-dimensional (3D) Finite Difference Models (Flac3D, Itasca 2006), which can achieve a realistic prediction of ground response at the face as well as of ground loads acting on the TBM (Graziani et al. 2007). An uncoupled calculation scheme was adopted, therefore, each hydro-mechanical analysis is split in two phases, seepage analysis and mechanical equilibrium.

For the preliminary set of analyses, the following assumptions were made in order to simplify the model, aimed at the assessment of the face stability: i) lining is perfectly rigid and installed before any deformation of the tunnel walls, ii) both lining and EPB shield represent impermeable boundaries so as flow is directed only towards the face, iii) the excavation camber is not included in the model, thus the boundary conditions applied to the face consist of fixed distributions of pore pressure as well as of effective stress, with given vertical gradients.

Two limit cases were considered for groundwater flow boundary conditions. Case A) represents the situation of maximum drainage at the tunnel face (pore pressure p = 0), corresponding to very high permeability of the spoil-water mixture inside the excavation chamber (i.e., totally unsatisfactory conditioning). Case B) represents the optimal situation, where the undisturbed hydrostatic pore pressure distribution is fully preserved, thanks to a sufficiently low permeability of the conditioned soil inside the excavation chamber, which therefore acts as an ideally impermeable barrier.

For case A), the time-dependent pore pressure distribution is calculated for increasing flow time.

Further assumptions were required to define the shape of the total pressure profile applied to the face. Again, two possible schematizations were considered: (1), a linear distribution characterized by a vertical gradient $\gamma_f = 10$ kN/m^3; (2), a uniform distribution. In either case, the variable chosen as control parameter is the total pressure (σ_{T0}) applied at the centre of the tunnel face.

There is no simple relation between the vertical gradient γ_f and the density of the muck inside the excavation chamber. Many factors, such as the water content, the foaming additives and the rotation speed of the cutting head can affect the vertical pressure gradient (Bezuijen et al. 2005). The assumed γ_f value was estimated from the average readings of pressure gauges at different positions inside the excavation chamber.

The limit support pressure at the face was calculated by the progressive reduction in the effective stress applied to the face. A safety factor can also be defined, e.g., as the ratio between the actual/design total pressure to the collapse limit pressure.

In a first set of analyses the position of the sand layer was considered fixed (base of the layer at z = 0, as in Figure 3), while boundary conditions at the face were varied (Table 3).

Table 3. Preliminary analyses without modeling of the EPBM.

	Permeability		Face conditions		
Case	k_1 (m/s)	k_2 (m/s)	Total pressure	Pore pressure	Analysis
A1	10^{-8}	10^{-6}	linear	A) p = 0	Flow + Mech
A1U	– *	10^{-6}	linear	A) p = 0	Flow + Mech
A2	10^{-8}	10^{-6}	uniform	A) p = 0	Flow + Mech
B1	10^{-8}	10^{-6}	linear	B) undisturbed	Mech only
B2	10^{-8}	10^{-6}	uniform	B) undisturbed	Mech only

*undrained

For the situation of "maximum drainage" at the face (case A), the time required to attain steady-state flow was found to be about 3 hours (Fig. 6). Hence, considering the typical excavation rates, it is reasonable to assume that the excavation devel-

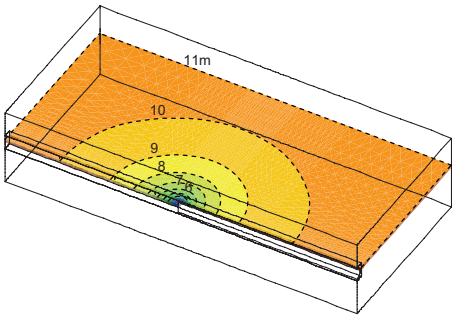

Figure 5. Analysis A1. Pore pressure distribution (interval 1 m) within the sand layer (plane z = 1 m).

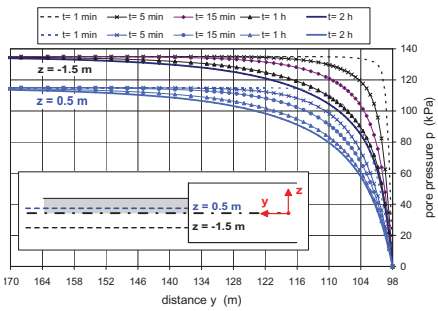

Figure 6. Analysis A1. Isochrones of pore pressure in front of the face along two lines in the plane x = 0.

ops in drained conditions, at least for what concerns the behaviour of the soft layer of higher permeability.

Therefore, a simplified modelling approach was also considered, in which the flow domain is limited to the high permeability layer, while the surrounding till formation is assumed to display a fully undrained response (analysis A1U, Table 3).

The deformation response of the tunnel face (Fig. 7) to the progressive decrease in support pressure, up to the limit of collapse, is monitored by the "characteristic curve" of the face: i.e., y-displacement ("face extrusion") vs total pressure σ_{T0} (Fig. 8). Collapse occurs essentially as squeezing deformation of the sand layer, which also induces local tensile failure in the overlying till (Fig. 7).

The main findings of the first set of analyses are hereafter summarized.

In case of fully drainage (p = 0), the distance of influence of the face on flow conditions is about 6D, i.e., at greater distances the reduction in pore pressure is less than 5% (Fig. 5 and 6). This situation represents the worst case scenario for the assessment of the impact of the excavation process (excessive drawdown of water table, risk of large settlements). On the other hand, this case corresponds to minimum demand of total pressure to stabilize the face (σ_{T0} = 20 k Pa, Figure 8).

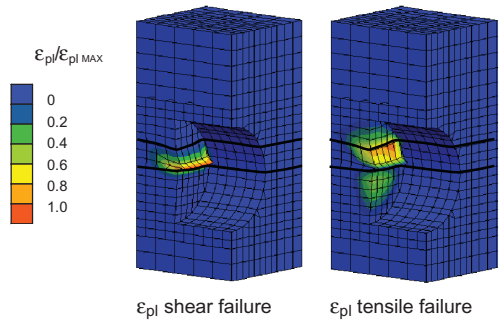

Figure 7. Collapse mechanism of the tunnel face. Plastic shear and tensile deformations for analysis A1.

In case of no disturbance of the initial hydrostatic pore pressures, the minimum total pressure necessary for face stability corresponds to σ_{T0} = 120 kPa, which indicates that almost the whole amount of pressure is required to counterbalance the water pressure.

The influence of the vertical gradient γ_f of face pressure seems modest, at least within the limits posed by the accuracy (±5 kPa) in the determination of the collapse load (Fig. 8). This result can be explained considering the small thickness of the low strength layer with respect to the tunnel diameter. The response of the face to unloading is therefore markedly different, and more advantageous, from the case of homogeneous soil.

The influence of the position of the high permeability layer inside the face was then investigated. Four different situations were analyzed, corresponding to a relative elevation z of the base of the layer, with respect to the tunnel axis, of –3, –1.5, 0 and 1.5 m.

The position of the soft layer within the tunnel face has a limited but yet significant influence on the minimum pressure necessary to avoid instability. Figure 9 show the situation in terms of average pressure σ_{T0} as a function of layer position: the

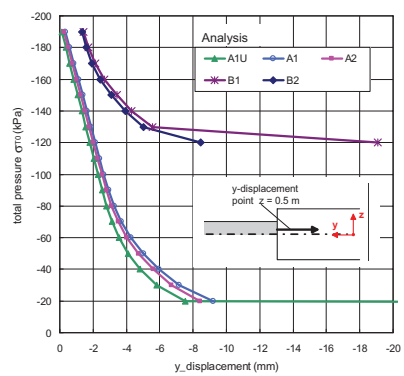

Figure 8. Extrusion displacement of the sand layer as a function of the total support pressure.

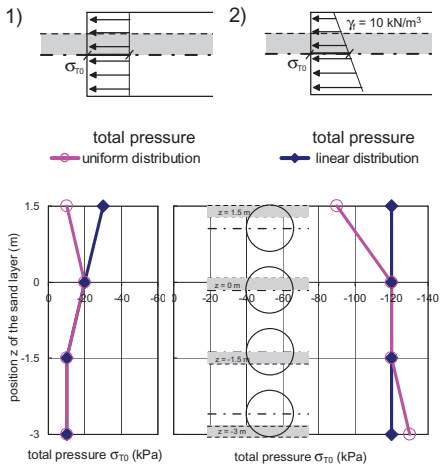

Figure 9. Minimum required support pressure σ_{T0} for different position of the sand layer and total pressure distribution.

maximum variation in σ_{T0} is of about 20 kPa. A less important variation would be obtained if the pressure value at the middle of the soft layer were considered instead of the pressure σ_{T0} at the centre of the tunnel face.

In conclusion, the amount of pore pressure reduction inside the excavation chamber, with respect to the undisturbed ground, proved to be the parameter which mostly affects the required support pressure. In fact, the difference in total support pressure between the limit cases A and B is very large. Moreover, intermediate situations, i.e. a partial drainage of the face, are equally possible.

The fundamental question therefore arises of how the pore pressure at the face can be properly estimated on the base of the relevant properties of the conditioned soil and EPB operation mode. To this purpose, the results of the experimental testing program on the conditioned soil could be instrumental.

4.3 *Analyses with explicit modeling of EPBM*

A possible refinement of the previous analyses is the capability of modeling also the conditioned soil inside the excavation chamber and the screw conveyor. This approach eliminates the need of an a-priori assumed distribution of pore pressure over the tunnel face but require an appropriate assessment of the permeability of conditioned and fully remoulded soil inside the machine. In fact the flow domain also includes, although with an idealized geometry, the aforementioned parts of the EPBM (Fig. 10).

Following the same approach of the analysis "without EPBM", a two-phase model has been adopted for the conditioned soil as well as for the natural soil surrounding the tunnel. The flow process and thus the pore pressure distribution was analyzed for increasing times (transient flow) up to obtain the steady state flow conditions. The key parameter is the permeability (k_{EPB}) of the conditioned soil inside the EPB, which determines not only the time required to reach stationary flow but also the relative head loss inside the EPB with respect to the decrease in hydraulic head in the surrounding ground.

Again, the analysis has been split down in two phases: the "flow" calculation, up to steady state, and then the "mechanical" phase, in which a progressive decrease in total stress applied to the face has been performed.

Valuable and explicatory results have been obtained carrying out the analyses described in Table 4, in which it is assumed $k_{EPB} = 10^{-6}$ or 10^{-5} m/s.

The main findings of these analyses are the following.

Most of the head loss occurs along the screw conveyor. The steady-state flow, established approximately after 4 hours, is characterized by a linear decrease in pore pressure from the inlet point to the discharge opening. This result, quite obvious from a theoretical standpoint, given the constant cross-section of the screw conveyor, should be only tentatively accepted owing to the oversimplified modelling. It is therefore essential that the

Table 4. Analyses including the EPBM conditioned soil.

Case	Permeability k_1 (m/s)	k_2 (m/s)	k_{EPB} (m/s)	Face conditions Total pressure	Pore pressure	Analysis
C2	10^{-8}	10^{-6}	10^{-6}	linear	–	Flow + Mech
C2U	– *	10^{-6}	10^{-6}	linear	–	Flow + Mech
C3	10^{-8}	10^{-6}	10^{-5}	linear	–	Flow + Mech

*undrained

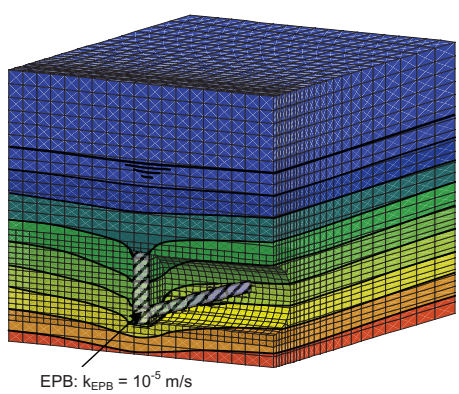

Figure 10. Analysis C3. Steady-state pore pressure contours (interval 20 kPa) in the model with EPB.

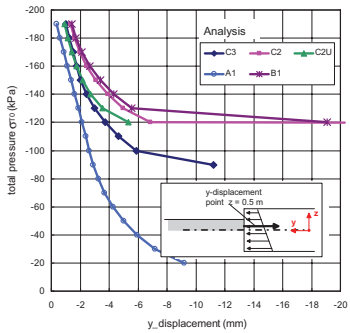

Figure 11. Comparison of characteristic curves of the face for different analyses.

linear distribution of pore pressure was confirmed by measurements performed in scale model tests (Merrit & Mair 2006).

It is sufficient to guarantee a muck permeability k_{EPB} as low as 10^{-6} m/s, that is, equal to the assumed in-situ permeability of the sand layer, in order to virtually eliminate the drawdown effect associated to the excavation advance. In fact, in this case, groundwater conditions stay undisturbed and most of the head loss develops inside the screw conveyor. From a mechanical point of view, the total pressure required for face stability equals that obtained in the previous analysis with "no drainage" hypothesis (Fig. 11).

If the permeability of the conditioned muck is increased to 10^{-5} m/s, steady-state pore pressure at face decrease significantly below the original undisturbed value ($\sigma_{T0} = 90$ instead of 120 kPa). Correspondingly, the "characteristic curve" of the face (i.e., extrusion displacement of the sand layer vs total pressure) indicates a stiffer behaviour than the previous case and a limit pressure of 90 kPa instead of 120 kPa.

The "characteristic curve" of the face shows that under the ordinary support pressure of 150 kPa the displacement at the centre point of the soft layer is as low as 3 mm.

Similar results, in terms of pore pressure as well as of face displacement, can be obtained also by a more fast calculation in which only the high permeability layer is represented by a two-phase approach whilst the surrounding low permeability till behaves as an "undrained" medium (analysis C2U).

5 CONCLUSIONS

Typical conditions of mixed face with layered ground of different strength and permeability have been considered.

A modeling approach which includes also the conditioned soil of the EPB in the seepage analysis has been proposed. In this way, a direct link can be established between conditioned soil properties and ground response during EPB boring.

Minimum support pressures required for face stability were calculated for different permeability of the conditioned soil, position of the sand layer and total pressure distribution over the face.

The main finding of this study is that a permeability of the conditioned soil inside the EPB shield less or equal to the permeability of the more permeable layer (10^{-6} m/s) can virtually eliminate the drawdown of the groundwater table.

In situ measurements of spoil permeability, as it flows off from the screw conveyor, have indicated values as low as 10^{-8} m/s, when the material exhibits a well homogenized texture and a low water content (i.e., optimum conditioning). Much higher values of permeability were obtained for disaggregated muck, which, in this case, was flowing discontinuously from the screw conveyor.

Data reported in the technical literature, mainly coming from EPB excavations in fine sand and silt, indicates muck permeability generally higher, in the range 10^{-6}–10^{-5} m/s (Bezuijen et al. 2005). In this case, a partial drainage of the face occurs. The influence of this less favorable conditions on face stability could also be investigated by the proposed model.

REFERENCES

Anagnostou G. 1995. The influence of tunnel excavation on the idraulic head. *Int. J. Num. Anal. Meth. Geomech.*, 19, 725–746.

Anagnostou G. & Kovari K. 1996. Face stability conditions with Earth-Pressure-Balanced shields. *Tunnelling and Underground Space Technology*, 11, 165–173.

Bezuijen A. & Schaminee 2001. Simulation of the EPB-shield TBM in model tests with foam as additive. *Int. Symp. Modern Tunneling Science And Technology*, Kyoto, Adachi Et Al. (eds), 935–940.

Bezuijen A., Talmon A.M., Joustra J.F.W. Grote B. 2005. Pressure gradients and muck properties at the face of an EPB. *Int. Symp. Geotechnical Aspects Of Underground Construction In Soft Ground*, Amsterdam, Bakker et al. (eds), 195–201.

Graziani A., Capata A. Romualdi P. 2007. Analysis of rock-TBM-lining interaction in squeezing rock. *Felsbau*, 25, 6, 22–31.

Hashimoto, T., Ye, G.L., Nagaya, J., Konda, T. & Ma, X.F. 2009. Study on earth pressure acting upon shield tunnellining in clayey and sandy grounds based on field monitoring. *Int. Symp. Geotechnical Aspects of Underground Construction in Soft Ground,* Shanghai, Ng et al. (eds), 307–312.

Itasca 2006. Flac 3D, User's Manual, Ver. 3.1.

Merrit A.S. & Mair R.J. 2006. Mechanics of tunnelling machine screw conveyors: model tests. *Geotechnique*, 56, 9, 605–615.

Vinai R., Oggeri C., Peila D. 2008. Soil conditioning of sand for EPB applications: a laboratory research. *Tunnelling And Underground Space Technology*, 23, 308–317.