INTERNATIONAL SOCIETY FOR
SOIL MECHANICS AND
GEOTECHNICAL ENGINEERING

SIMSG ISSMGE

This paper was downloaded from the Online Library of the International Society for Soil Mechanics and Geotechnical Engineering (ISSMGE). The library is available here:

https://www.issmge.org/publications/online-library

This is an open-access database that archives thousands of papers published under the Auspices of the ISSMGE and maintained by the Innovation and Development Committee of ISSMGE.

Geotechnical Aspects of Underground Construction in Soft Ground, Kusakabe, Fujita & Miyazaki (eds)
© 2000 Balkema, Rotterdam, ISBN 90 5809 1 066

Monitoring: Evaluation of stresses in the lining of the Second Heinenoord Tunnel

K.J. Bakker – *Ministry of Transport, Public Works and Water Management, Utrecht & Delft University of Technology, Netherlands*

W.L. Leendertse – *Ministry of Transport, Public Works and Water Management, Utrecht, Netherlands*

P.S. Jovanovic – *Holland Railconsult, Utrecht, Netherlands*

G.P.C. van Oosterhout – *TNO Building and Construction Research, Delft, Netherlands*

ABSTRACT: During the construction of the Second Heinenoord Tunnel, in the Netherlands, an extensive monitoring program of research and experiments was executed. Part of this was related to the development of stresses and strains in a tunnel in soft soil. The monitoring information with respect to the deformation, and stresses in the tunnel lining of the Second Heinenoord tunnel have been back-analysed and evaluated using 2-dimensional and 3-dimensional Finite Element analysis. An inventory of unfavourable deformations and damage to the lining has led to the development of a stochastic model, relating the assembly of lining segments in a ring to deformations and stresses. Measurement and evaluation of assembly stresses with 3D Finite Element analysis has shown the potential for a step forward in the innovative design of tunnel linings.

1. INTRODUCTION

In 1993 it was decided by the Dutch minister of Transport and Public Works, to have two pilot projects of tunnelling with the boring technique, in the soft soil of the Netherlands, see also Bakker (1999). One of the projects is the construction of the Second Heinenoord Tunnel. The construction of this tunnel was supplemented with a monitoring scheme. One of the partial projects within this scheme was the monitoring of stresses and strains developing in the segmental lining. On two locations, under the monitoring fields, one under the North Bank, and one under the monitoring field on the South Bank, a tunnel-lining ring was equipped with measuring equipment; strain gauges, pressure cells and deformation detectors. Figure 1 show one of the instrumented rings.

As the first section of the tunnel showed more damage to the lining than was expected, an additional review was done on the installation procedure, and its impact on the development of stresses in the lining. A comparison of both numerical analysis, measurement of stresses and strains and local deformation between segments, indicate that the assembling and loading process is of significant influence on local stresses, and the chance of damage to elements. The compression of the initially unloaded ring, and its connection to a ring which is partially loaded, leading to what we call 'the horn'-effect leads to local stresses, especially near the Key-block.

After slight adaptation of the installation procedure, the alignment, and to the dowel construction, unfavourable cracking of elements was diminished.

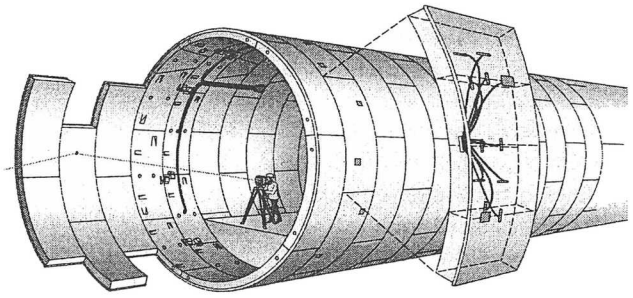

Figure 1 Measuring ring and instrumentation

2. DAMAGE PATTERNS TO THE LINING

At the start of the tunnel boring process, i.e. the first 100 m of construction, damage to the lining was higher than expected. In order to get a better understanding about the causes of the damage, a project was issued and carried out by Leendertse (1997). Here a number of characteristic observations will be described, subsequently a simple kinematical model will be described in § 4, relating inaccuracies in installation with the damages.

The characteristic damage patterns were described as follows

1. Joints show differential deformations as large as 30 mm. The differential deformations on the

longitudinal joints within one ring are much less.

2. A large number of leakages have been observed between segments (rings), though there is not a clear relation between the differential deformations and the amount of leakage water.
3. At some places corners of elements have been broken. The broken corner is always on the side facing the tunnel boring machine.
4. At a large number of places, edges of elements have spalled off. For all cases these edges are facing the TBM side of the element. This damage concentrates in the zone of the elements where the notches for the dowels are situated. The size of this damage is as wide as 0.4 m x 0.5 m, with a shale thickness of approximately 0.1 m. At some places reinforcement steel is visible due to this type of damage
5. On a regular base the edges of elements adjacent to the Key-block have been damaged. Quite often such a damaged edge is as wide as the element width.

The damage was not exclusively concentrated near the Key block, but appeared at the flanks of the tunnel too, but to a lesser degree. Apart from the situations that edges have been snapped of, most of the damage is correlated with the location of dowel and notch locations.

Each ring at its curved side is provided with two dowels (or notches), in conjunction with the location of the bolts, to create a system of interlocking that guarantees the capacity to transfer shear forces between tunnel rings. On the dowels, a kaubit strip is placed in order to smooth the interaction. Kaubit is a very soft material which reduces friction (if necessary). In the design configuration the dowel and notch system has a force-free deformation of 6 to 7 mm. If this space is exceeded, the dowel is loaded. If the dowel (or the notch) is loaded beyond its capacity, damage is inflicted on to the concrete of the tunnel lining. For the 2nd Heinenoord tunnel a principle for the design of the dowel and notch system is that the dowel is stronger than the side supporting the notch. This leads to fracturing of the element, rather than the notch, in the direction the element is loaded.

Although there is not a one to one correlation between places with leakage and places of damage, there is a strong feeling that the locations of leakage are correlated with places where the back wall of a notch is overloaded and there is damage to the outer-wall of the tunnel segment forming a short cut behind the rubber water sealing, see Figure 2.

At the ring joint triplex wood plates were used instead of Kaubit as a material to avoid damage due to assembly stresses. It is a topic of further research at this moment whether this choice did not counter-act its purpose.

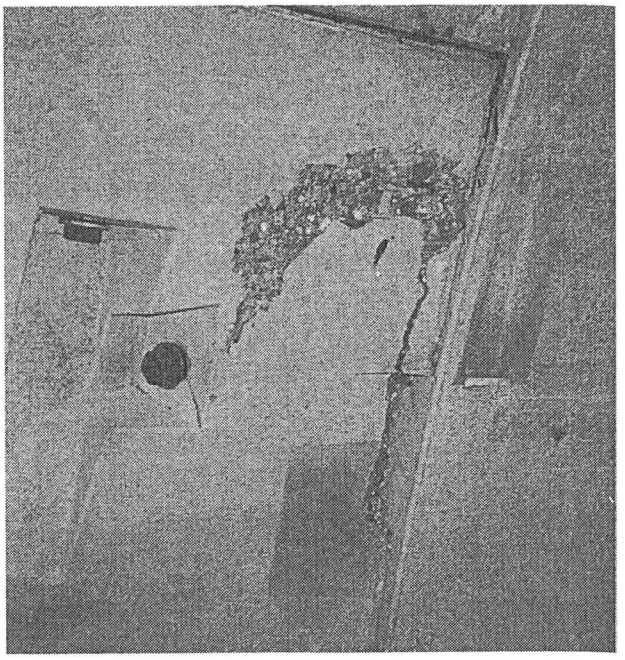

Figure 2. Damage to the tunnel lining; i.e. damage near the dowel and notch system.

3. MEASURING RINGS AND INSTRUMENTATION

On two locations, under the monitoring fields, under the North Bank, and the South Bank, a tunnel-lining ring was equipped with strain gauges to measure different directions per element (ten strain gauges per element).

All seven elements in a ring were instrumented in order to derive a full insight into the stress distribution in the ring (see Figure 1), as a function of time and distance behind the TBM. Complimentary to strain gauges, pressure cells were mounted on the outer surface of the elements; e.g. two pressure cells per element on 7 elements.

On the North Bank the tunnel axis was located approximately 16.25 m below soil surface, whereas on the South Bank the tunnel axis is 16.00 m below the soil surface. The main parameters are described in Table I, and Table II.

In order to get an impression about differential deformations between elements, special devices were placed, bridging the joints between segments; details of these instruments are given by Leendertse (1997).

The biggest displacements seem to occur directly after the ring leaves the tail of the TBM and is loaded by the soil. The soil loading is being activated in a combined process. Firstly due to grouting a pressure driven action is developed. Secondly this action

Table I. Description of layers and soil parameters for the South Bank.

symbol	soil type	top of layer [m] N.A.P.	$(_{sat}$ $((_{dry})$ [kN/m³]	S_u [kPa]	c' [kPa]	φ' [°]	ν [-]	E_{oed} [MPa]	K_0 [-]
OA/1/OB	Mixture of sand and clay	+ 3.50	17.2 (16.5)	-	3	27	0.34	5.2	0.58
3	Sand, local parts of clay	- 3.25	19.5	-	0	35	0.30	26	0.47
4	Peat	- 4.50	13	35	7	22.5	0.35	4.2	0.60
16	Clay, silty	- 7.25	16.3	35	5	26	0.34	4.1	0.60
18	sand, local parts of clay	- 10.50	20.5	-	0	36.5	0.30	40	0.45
32	sand, gravel	- 14.00	20.5	-	0	36.5	0.30	60	0.50
38A	clay, local parts of sand	- 21.50	20.0	140	7	31	0.32	16	0.55
38F	sand	- 24.50	21.0		0	37.5	0.30	80	0.55

changes to soil structure interaction while the grouting material consolidates and hardens. This process develops approximately within a period of 24 hours.

When the tunnel-ring leaves the tail of the TBM, a characteristic deformation is measured. Generally the roof of the tunnel tends to come down between 0.003 and 0.006 m, whereas the sides of the tunnel seem to displace outwards just 0.002 to 0.004 m. The bottom of the tunnel is relatively stable, coming up between 0.000 and 0.003 mm.

4. BACK ANALYSIS OF MEASURING RINGS FOR THE SOIL LOADING PART

Based on the evaluation of the measurements on the North bank the importance of installation stresses was recognised. For the 2nd measuring ring on the South bank, it was decided to start data collection of stresses directly after assembly of a tunnel ring. With this approach it was possible to determine bending

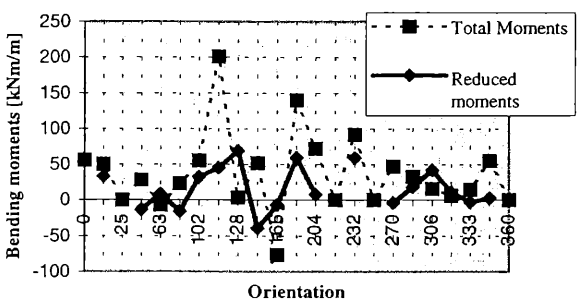

Figure 3. Bending moment measuring ring south bank; total and reduced for installation.

moments with and without installation stresses (see Figure 3). To begin with, the reduced moments have been back-analysed with the 2 Dimensional Finite Element code PLAXIS. As input for the soil data the data given in table I was used. For the structural data the data according to table II were used. The bending stiffness of the lining was reduced by 50 %, in order

Table II. parameters for the 2nd Heinenoord tunnel.

a	= 3.975 m
h/D	≈ 2
d	= 0.35 m
K_0	= 0.5
γ_n	= 18 kN/m³
E	= 30.000.000 kPa

to account for joints. Figure 4 compares the reduced moments with the PLAXIS back-analysis results. Fitting the Finite Element Analysis to the data, both for the measuring ring on the North Bank as well as for the South Bank, it was observed that the best conformity was found for an assumed contraction of approximately 0.5 %; i.e. the low soil stresses measured where reproduced best, see Figure 5.

For a calculation without volume loss the agreement with the measurements is less; a smaller amplitude of the bending moment is calculated, i.e. M_{max} = 79 kNm/m, instead of 93 kNm/m.

The normal forces in the tunnel lining are reproduced much less. It seems as if the low soil stresses are not compatible with the normal forces being measured. It is thought that maybe, the soil stresses, as measured, have to be related to an earlier stage of stress development than the normal forces. It is as if the low stress level directly after grouting is "frozen in" by the hardening process of the cement in the grout. It must be considered that maybe after that

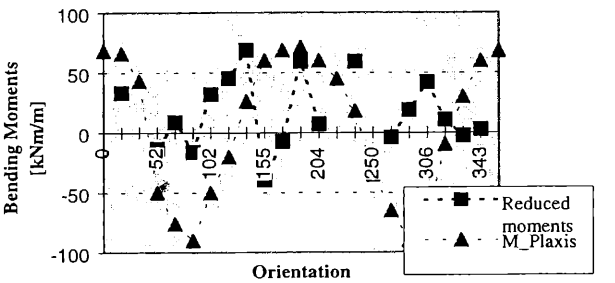

Figure 4. Back-analysis of measured (reduced) bending moments, for the South Bank

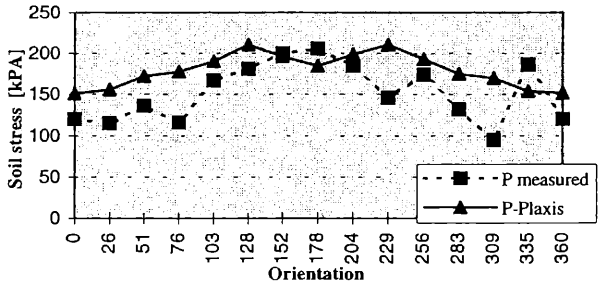

Figure 5. Radial soil stresses on the lining.

the grout has cemented, the effective soil stresses have increased again, which was not measured due to the fact that the grouting material has 'over-bridged' the pressure gauges. The strain gauges on the other hand have a higher degree of reliability.

5. STOCHASTIC ANALYSIS OF SEGMENT INSTALLATION

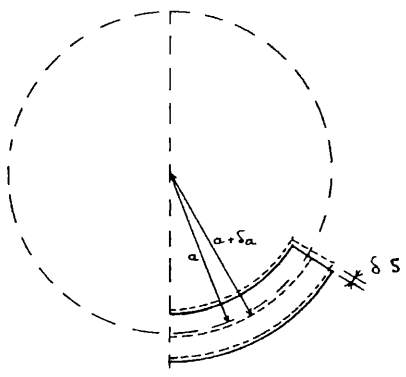

Figure 6 Geometry model for the installation of lining segments

Compression and ovalisation cannot explain the differential deformation as observed. In order to analyse the effect of inaccurate installation, a third feasible cause for this, a stochastic model was developed. One of the partial components of this is a geometry model based on the assumption that there is an objective frame of reference for the centre of the tunnel to be constructed and subsequent installation elements relative to this.

The basic assumptions for the geometry model are:

- rotation of elements is neglected.
- elements have an arc-length S with a mean value of $\mu_s = \frac{2\pi a}{n}$, and a standard deviation of σ_s
- elements are being placed adjacent to the preceding elements with its connection side placed on the line from the centre of the frame of reference going through the end of the formerly placed element.

With respect to the reference point of observation, the centre of the tunnel, the arc-length of the element at the ideal radius, is being influenced by the accuracy with which the elements are being placed with respect to this ideal line, see Figure 6.

An inaccurate installation of a segment with an error of δa will add up to an inaccuracy with respect to the arc length of the element, measured along the tangent of the ideal tunnel ring of $\frac{2\pi}{n}\delta a$.

A rotation of the element is not taken into account, as the contribution of rotation is assumed to be of second order. The mean length of the error in the radial direction is essentially determinate for the inaccuracy in characteristic arc length.

If we add up the inaccuracy with respect to the arclength of the element as a cause of manufacturing inaccuracy, we can calculate a standard deviation for the arc length of the projection of the element on the ideal tunnel radius.

$$\sigma_s = \sqrt{\sigma_{s_0}^2 + \left(\frac{2\pi}{n}\sigma_a\right)^2} \qquad (1)$$

If we sum this up over n elements to make the circle, the standard deviation of the closing gap can be found. The size of the gap is found as a function of the reliability index of β, according. to

$$\Delta O = \beta\sigma_o = \beta\sqrt{n\left(\sigma_s^2 + \left(\frac{2\pi}{n}\sigma_a\right)^2\right)} \qquad (2)$$

Subsequently, it is assumed that a spring-work type of deformation is energetically favourable to accommodate for a negative gap, when installing the Key-block, (here the length of the Key block is not sketched, because this length is only of lower order influence). Correlating the kinematics of the mechanism with equation 2, the radial displacement is calculated according to

$$\Delta R = \frac{\Delta O}{2\sin \varphi/2} = \frac{\beta\sqrt{n\left(\sigma_s^2 + \left(\frac{2\pi}{n}\sigma_a\right)^2\right)}}{2\sin \pi/n} \qquad (3)$$

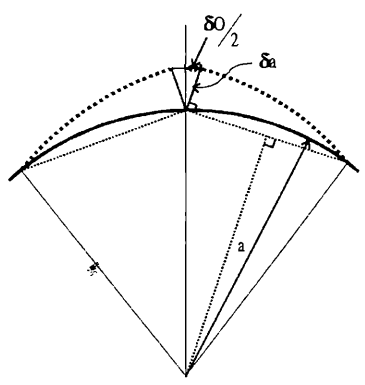

Figure 7 Spring-work shaped deformation due to a lack of space near the Key-block.

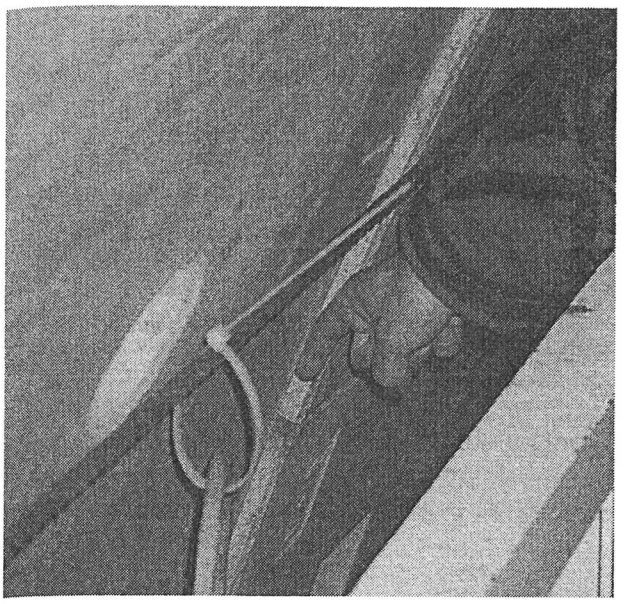

Figure 8. Differential displacement as observed at the 2nd Heinenoord tunnel.

If we evaluate this for the data related to the Second Heinenoord tunnel, that is; $\sigma_s \approx 0.00025\ m$ $\sigma_a \approx 0.002\ m$ and n = 7, and consider that equation 3 is linear in the reliability index, the gap is in excess of 0.011 m in 5 % of the rings, and so on.

Depending on the distribution of the strength of the fixation with which the ring is fastened to the tube, the assumed displacement according to Figure 6. might develop with other couples of segments in the ring. That such a displacement is not an exaggeration of what might be expected, is shown in Figure 8.

Observations like this have led to a more detailed numerical analyses for the construction stage of the tunnel lining, see v.d Horst 1999, which supports this type of assumption. The effect of distortions of the lining, in combination with a normal force in the lining, might give rise to an additional bending moment in the lining of approximately;

$$M_{ad} = N\,\delta \approx 1500 * 0.02 \approx 30\ kNm/m$$

If we add this to the bending moments calculated for the soil loading, the discrepancy to the total bending moments measured becomes smaller. In an effort to reduce the gap furthermore, 3D numerical analysis was applied.

6. 3D ANALYSIS OF THE CONSTRUCTION STAGE

Measurements and observations show that the assembling process of tunnel rings is the cause of stress development in the ring even before the soil loading is active. The 'eigen' stresses related to this phenomena, and its distribution, remain to be recognisable, after the soil loading is active. With this, the maximum measured bending moments are twice as high as predicted with conventional models.

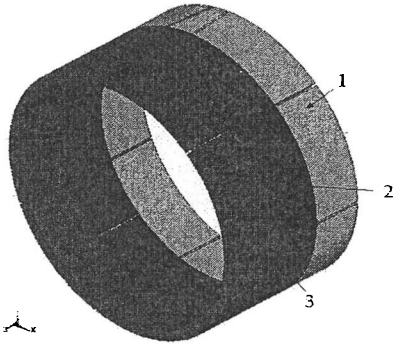

Figure 9. 3D-model of segmental lining

In comparison to conventional structural models, three dimensional finite element analyses of the construction phase show a different type of stress distribution in the concrete lining sections, which is more in agreement with the in-situ measurements. With 3D models it becomes possible to predict the influences of the assembling process and imperfections of segments on lining behaviour as well as the influence of joint type with packing materials.

The 3D models applied have been composed applying the ANSYS FEM software package. The concrete segments were modelled using solid volume elements. The three rings model, see Figure 9, (7 segments and the key segment each) was composed with in total 8100, eight nodes, solid brick elements. The soil interaction was modelled applying spring-damper elements, in total 1418, for three-quarters of the ring perimeter (according to Duddeck (1980). For the lining a Young's modulus of 45,0 MPa was used. The interaction between the segments (in all directions) was realised applying interface or contact elements.

The packing material, the only contact between the rings at the circumferential joint, was represented by 4 contact elements each, behaving as bi-linear springs, i.e. elastic until sliding occurs. The stiffness

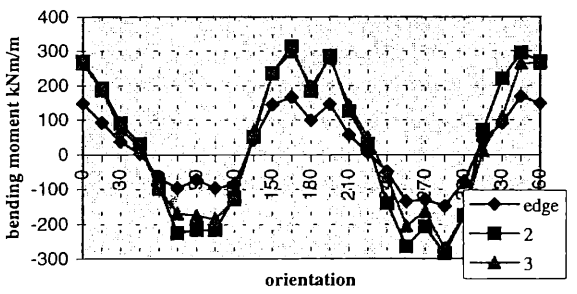

Figure 10. Bending moments according. To the 3 ring Solid model of the tunnel lining.

of these 4 elements is taken from the stiffness of the packer (which is assumed to behave linear elastic). Dowels are not modelled. The first ring to be installed (no 3 in Figure 9) is supported in the axial direction. In the radial direction the surrounding soil is modelled as linear springs, according. to Duddeck (1980). The radial forces are also according to this theory (350 kN/m^2), while in the axial direction the TBM driving forces (14 jacks, max. force at the bottom of 3500kN, min force at the top of 1000kN) are modelled. When considering the construction stage the last ring, within the TBM shield, was directly loaded by the jack forces without any load or support in the radial direction. In the serviceability stage all rings are loaded and supported in the same way.

The tangential stress distribution (bending moments) in subsequent rings, within the shield (edge of ring 1) and neighbour ring (middle, no 2), and subsequently the last ring, (no 3), behind the shield is shown on Figure 10. What we can observe is the distinctly higher bending moments in the lining in comparison with the 2D modelling. The amplitude of which is in the same order as measured. The interaction with a partially or unloaded ring in the tail of the TBM seems to increase the stiffness of the ring, withholding the stress reducing interaction with the soil. The distinctly higher bending moment at the bottom and the roof of the tunnel, in comparison to the sides, have a similarity to the measurements by the fact that high amplitudes in bending moments at the bottom of the tunnel were measured.

7. CONCLUDING REMARKS

The stresses in a tunnel lining are composed of contributions due to 1) Ring-assembly, 2) Soil loading, and 3) Geometrical non-linearity. The latter aspect contributes to the stresses in the lining. Due to the deformations the normal forces and bending moments in the lining increase. The uncertainty with respect to the radial placement of elements, and the installation of the Key block, may contribute to the bending moments in a similar way as geometrical non-linearity does.

The contribution of soil loading can be analysed relatively simply with a 2D Finite Element model.

The latter offers the opportunity to account for the volume losses due to over excavation.

The contributions due to installation stresses have been analysed here with a 3 ring 3D Finite Element model. Here the effect of loaded and unloaded rings and the effect of compression of the new tunnel ring were analysed. The relative higher stiffness of the tunnel leads to higher bending moments. For a more advanced analysis of assembly stresses, a staged analysis of the installation of each tunnel lining segment is believed to be a modelling option which might decrease the still existing differences between measured and calculated assembly stresses.

In order to validate the 3D models for tunnel lining design, large scale laboratory experiments are scheduled. The purpose of these experiments is to perform detailed simulations of the tunnel ring assembly process and its effects on the stress and strain development in lining segments. In these experiments the soil loading will be simulated by external jacks.

The monitoring of the lining of the Second Heinenoord tunnel has greatly extended our insights in the stresses and strains in a segmented tunnel lining in soft soil. The tunnel projects scheduled in the near future in the Netherlands will also be monitored offering a unique opportunity to enhance the knowledge of tunnel driving in soft soil.

REFERENCES

Bakker, K.J., F. de Boer, & J.B.M. Admiraal, , 1999. Monitoring the Second Heinenoord Tunnel and the Botlek Rail Tunnel, two independent research programs on bored tunnelling in Soft soil. *Proc. IS, Geotechnical Aspects of Underground Construction in Soft Ground, TC28, Tokyo Japan*

Leendertse, W.L. , K.J. Bakker & E.A.H. Teunissen, 1997. TBM-Tunnelling in the Netherlands; *Proc. Etc. Vienna, april 1997. Rotterdam: Balkema.*

Duddeck, H. 1980. Empfehlungen zur Berechnung van Tunneln im Lockergestein. *Die Bautechniek 10/1980*

Leendertse, W.L. 1997. Damage to the segmental lining of the west tube of the Second Heinenoord tunnel (in Dutch). *Bouwdienst Rijkswaterstaat 1933-T-980735*

Horst, E.J. van der, C.B.M. Blom, & P.S. Jovanovic, 1999. Influence of packing materials on tunnel lining behaviour. *Proc. ECSMGE, Amsterdam, Balkema*